National Defence Défense nationale

A-CR-CCP-804/PG-001

ROYAL CANADIAN AIR CADETS

# PROFICIENCY LEVEL FOUR QUALIFICATION STANDARD AND PLAN

(ENGLISH)

(Supersedes A-CR-CCP-804/PG-001 dated 2011-01-01)

Cette publication est disponible en français sous le numéro A-CR-CCP-804/PG-002.

**Issued on Authority of the Chief of the Defence Staff**

Canada

**NOTICE**
This documentation has been reviewed by the technical authority and does not contain controlled goods. Disclosure notices and handling instructions originally received with the document shall continue to apply.

**AVIS**
Cette documentation a été révisée par l'autorité technique et ne contient pas de marchandises contrôlées. Les avis de divulgation et les instructions de manutention reçues originalement doivent continuer de s'appliquer.

National Defence Défense nationale

A-CR-CCP-804/PG-001

ROYAL CANADIAN AIR CADETS

# PROFICIENCY LEVEL FOUR QUALIFICATION STANDARD AND PLAN

(ENGLISH)

(Supersedes A-CR-CCP-804/PG-001 dated 2011-01-01)

Cette publication est disponible en français sous le numéro A-CR-CCP-804/PG-002.

**Issued on Authority of the Chief of the Defence Staff**

**OPI: D Cdts & JCR 4 – Senior Staff Officer Youth Programs Development**

**2015-07-01**

Canada

**NOTICE**

This documentation has been reviewed by the technical authority and does not contain controlled goods. Disclosure notices and handling instructions originally received with the document shall continue to apply.

**AVIS**

Cette documentation a été révisée par l'autorité technique et ne contient pas de marchandises contrôlées. Les avis de divulgation et les instructions de manutention reçues originalement doivent continuer de s'appliquer.

## LIST OF EFFECTIVE PAGES

Insert latest changed pages and dispose of superseded pages in accordance with applicable orders.

**NOTE**

The portion of the text affected by the latest change is indicated by a black vertical line in the margin of the page. Changes to illustrations are indicated by miniature pointing hands or black vertical lines.

Dates of issue for original and changed pages are:

| | | | | | |
|---|---|---|---|---|---|
| Original | 0 | 2015-07-01 | Ch. | 3 | |
| Ch. | 1 | | Ch. | 4 | |
| Ch. | 2 | | Ch. | 5 | |

Zero in Change No. column indicates an original page. Total number of pages in this publication is 417 consisting of the following:

| Page No. | Change No. | Page No. | Change No. |
|---|---|---|---|
| Cover page | 0 | 4-X02-1 to 4-X02-2 | 0 |
| Title | 0 | 4-403-1 to 4-403-2 | 0 |
| A to C | 0 | 4-M403.01-1 to 4-M403.01-2 | 0 |
| i to viii | 0 | 4-M403.02-1 to 4-M403.02-2 | 0 |
| 1-1 to 1-4 | 0 | 4-M403.03-1 to 4-M403.03-2 | 0 |
| 2-1 to 2-4 | 0 | 4-M403.04-1 to 4-M403.04-4 | 0 |
| 2A-1 to 2A-10 | 0 | 4-M403.05-1 to 4-M403.05-4 | 0 |
| 2B-1 to 2B-2 | 0 | 4-M403.06-1 to 4-M403.06-4 | 0 |
| 2C-1 to 2C-4 | 0 | 4-C403.01-1 to 4-C403.01-2 | 0 |
| 2D-1 to 2D-10 | 0 | 4-X04-1 to 4-X04-2 | 0 |
| 3-1 to 3-4 | 0 | 4-X05-1 to 4-X05-2 | 0 |
| 3A-1 to 3A-2 | 0 | 4-406-1 to 4-406-2 | 0 |
| 3B-1 to 3B-4 | 0 | 4-M406.01-1 to 4-M406.01-4 | 0 |
| 3B1-1 to 3B1-8 | 0 | 4-C406.01-1 to 4-C406.01-4 | 0 |
| 3B2-1 to 3B2-2 | 0 | 4-C406.02-1 to 4-C406.02-4 | 0 |
| 3B3-1 to 3B3-6 | 0 | 4-407-1 to 4-407-2 | 0 |
| 3B4-1 to 3B4-8 | 0 | 4-M407.01-1 to 4-M407.01-4 | 0 |
| 3B5-1 to 3B5-18 | 0 | 4-M407.02-1 to 4-M407.02-2 | 0 |
| 3B6-1 to 3B6-30 | 0 | 4-C407.01-1 to 4-C407.01-2 | 0 |
| 3B7-1 to 3B7-6 | 0 | 4-408-1 to 4-408-2 | 0 |
| 3C-1 to 3C-2 | 0 | 4-M408.01-1 to 4-M408.01-2 | 0 |
| 3D-1 to 3D-2 | 0 | 4-M408.02-1 to 4-M408.02-2 | 0 |
| 3D1-1 to 3D1-4 | 0 | 4-M408.03-1 to 4-M408.03-2 | 0 |
| 3E-1 to 3E-2 | 0 | 4-M408.04-1 to 4-M408.04-2 | 0 |
| 3E1-1 to 3E1-2 | 0 | 4-C408.01-1 to 4-C408.01-2 | 0 |
| 4-400-1 to 4-400-2 | 0 | 4-C408.02-1 to 4-C408.02-2 | 0 |
| 4-X01-1 to 4-X01-2 | 0 | 4-409-1 to 4-409-2 | 0 |

**LIST OF EFFECTIVE PAGES (Cont)**

| Page No. | Change No. |
|---|---|
| 4-M409.01-1 to 4-M409.01-4 | 0 |
| 4-M409.02-1 to 4-M409.02-4 | 0 |
| 4-M409.03-1 to 4-M409.03-4 | 0 |
| 4-M409.04-1 to 4-M409.04-2 | 0 |
| 4-M409.05-1 to 4-M409.05-2 | 0 |
| 4-C409.01-1 to 4-C409.01-2 | 0 |
| 4-C409.02-1 to 4-C409.02-2 | 0 |
| 4-C409.03-1 to 4-C409.03-2 | 0 |
| 4-C409.04-1 to 4-C409.04-4 | 0 |
| 4-C409.05-1 to 4-C409.05-2 | 0 |
| 4-C409.06-1 to 4-C409.06-2 | 0 |
| 4-X20-1 to 4-X20-2 | 0 |
| 4-429-1 to 4-429-2 | 0 |
| 4-C429.01-1 to 4-C429.01-2 | 0 |
| 4-C429.02-1 to 4-C429.02-4 | 0 |
| 4-C429.03-1 to 4-C429.03-4 | 0 |
| 4-C429.04-1 to 4-C429.04-2 | 0 |
| 4-431-1 to 4-431-2 | 0 |
| 4-M431.01-1 to 4-M431.01-2 | 0 |
| 4-M431.02-1 to 4-M431.02-2 | 0 |
| 4-C431.01-1 to 4-C431.01-2 | 0 |
| 4-C431.02-1 to 4-C431.02-2 | 0 |
| 4-C431.03-1 to 4-C431.03-2 | 0 |
| 4-432-1 to 4-432-2 | 0 |
| 4-M432.01-1 to 4-M432.01-2 | 0 |
| 4-M432.02-1 to 4-M432.02-2 | 0 |
| 4-M432.03-1 to 4-M432.03-2 | 0 |
| 4-C432.01-1 to 4-C432.01-2 | 0 |
| 4-C432.02-1 to 4-C432.02-2 | 0 |
| 4-C432.03-1 to 4-C432.03-2 | 0 |
| 4-436-1 to 4-436-2 | 0 |
| 4-M436.01-1 to 4-M436.01-2 | 0 |
| 4-M436.02-1 to 4-M436.02-2 | 0 |
| 4-C436.01-1 to 4-C436.01-2 | 0 |
| 4-C436.02-1 to 4-C436.02-2 | 0 |
| 4-C436.03-1 to 4-C436.03-4 | 0 |
| 4-437-1 to 4-437-2 | 0 |
| 4-M437.01-1 to 4-M437.01-2 | 0 |
| 4-M437.02-1 to 4-M437.02-2 | 0 |
| 4-C437.01-1 to 4-C437.01-2 | 0 |
| 4-C437.02-1 to 4-C437.02-4 | 0 |
| 4-440-1 to 4-440-2 | 0 |
| 4-M440.01-1 to 4-M440.01-2 | 0 |
| 4-M440.02-1 to 4-M440.02-2 | 0 |
| 4-C440.01-1 to 4-C440.01-2 | 0 |
| 4-C440.02-1 to 4-C440.02-2 | 0 |
| 4-C440.03-1 to 4-C440.03-4 | 0 |
| 4-C440.04-1 to 4-C440.04-2 | 0 |
| 4-C440.05-1 to 4-C440.05-2 | 0 |
| 4-C440.06-1 to 4-C440.06-4 | 0 |
| 4-C440.07-1 to 4-C440.07-4 | 0 |
| 4-C440.08-1 to 4-C440.08-2 | 0 |
| 4-C440.09-1 to 4-C440.09-4 | 0 |
| 4-C440.10-1 to 4-C440.10-2 | 0 |
| 4-C440.11-1 to 4-C440.11-2 | 0 |
| 4-460-1 to 4-460-2 | 0 |
| 4-C460.01-1 to 4-C460.01-2 | 0 |
| 4-C460.02-1 to 4-C460.02-2 | 0 |
| 4-C460.03-1 to 4-C460.03-2 | 0 |
| 4-470-1 to 4-470-2 | 0 |
| 4-C470.01-1 to 4-C470.01-2 | 0 |
| 4-C470.02-1 to 4-C470.02-2 | 0 |
| 4-C470.03-1 to 4-C470.03-2 | 0 |
| 4-C470.04-1 to 4-C470.04-2 | 0 |
| 4-490-1 to 4-490-2 | 0 |
| 4-M490.01-1 to 4-M490.01-4 | 0 |
| 4-M490.02-1 to 4-M490.02-4 | 0 |
| 4-M490.03-1 to 4-M490.03-2 | 0 |
| 4-M490.04-1 to 4-M490.04-2 | 0 |
| 4-M490.05-1 to 4-M490.05-4 | 0 |
| 4-C490.01-1 to 4-C490.01-2 | 0 |
| 4-C490.02-1 to 4-C490.02-2 | 0 |
| 4-C490.03-1 to 4-C490.03-4 | 0 |
| 4-C490.04-1 to 4-C490.04-4 | 0 |
| 4-C490.05-1 to 4-C490.05-4 | 0 |
| 4-C490.06-1 to 4-C490.06-4 | 0 |
| 4-C490.07-1 to 4-C490.07-2 | 0 |
| 4A-1 to 4A-6 | 0 |

**Contact Officer: D Cdts & JCR 4-7-4 – Air Cadet Program Development Staff Officer**

**© 2015 DND/MDN Canada**

THIS PAGE INTENTIONALLY LEFT BLANK

## FOREWORD AND PREFACE

1. **Issuing Authority.** This Qualification Standard and Plan (QSP) A-CR-CCP-804/PG-001 was developed under the authority of the Director Cadets and Junior Canadian Rangers (D Cdts & JCR) in accordance with Cadet Administrative and Training Order (CATO) 11-03, *Cadet Program Mandate*, CATO 11-04, *Cadet Program Outline* and CATO 51-01, *Air Cadet Program Outline*, and issued on the authority of the Chief of Defence Staff.

2. **Development.** Development of this QSP was in accordance with the performance-oriented concept of training outlined in the A-P9-050 Series, *Canadian Forces Individual Training and Education System*, with modifications to meet the needs of the Canadian Cadet Organization (CCO).

3. **Purpose of the QSP.** The QSP is to be used by Royal Canadian Air Cadet Squadrons to conduct Proficiency Level Four, as outlined in CATO 11-04, *Cadet Program Outline* and CATO 51-01, *Air Cadet Program Outline*.

4. **Suggested Changes.** Suggested changes to this document may be sent directly to cadettraining@canada.ca.

THIS PAGE INTENTIONALLY LEFT BLANK

## TABLE OF CONTENTS


| | | PAGE |
|---|---|---|
| **CHAPTER 1** | **GENERAL** | **1-1** |
| | AIM | 1-1 |
| | PROGRAM DESIGN | 1-1 |
| | PERFORMANCE OBJECTIVES | 1-1 |
| | TRAINING PREREQUISITES | 1-3 |
| | USE OF THE QSP | 1-3 |
| **CHAPTER 2** | **TRAINING MANAGEMENT DETAILS** | **2-1** |
| | RESPONSIBLE AGENCY AND TRAINING ESTABLISHMENTS | 2-1 |
| | TRAINING DETAILS | 2-1 |
| | TRAINING ADMINISTRATION | 2-3 |
| | QUALIFICATION | 2-3 |
| | RELATED DOCUMENTS | 2-4 |
| | REFERENCES | 2-4 |
| | Annex A – PROFICIENCY LEVEL FOUR TRAINING SUMMARY AND TIME ALLOCATION | 2A-1 |
| | Annex B – SCHEDULING GUIDELINES | 2B-1 |
| | Annex C – RESOURCE REQUIREMENTS | 2C-1 |
| | Annex D – REFERENCES | 2D-1 |
| **CHAPTER 3** | **CADET EVALUATION** | **3-1** |
| | PURPOSE | 3-1 |
| | LEARNER EVALUATION | 3-1 |
| | CADET EVALUATION DESIGN AND DEVELOPMENT | 3-1 |
| | CP DEVELOPMENTAL PERIODS (DPS) | 3-2 |
| | CADET ASSESSMENT OF LEARNING PLAN | 3-2 |
| | ASSESSMENT INSTRUMENTS | 3-3 |
| | MONITORING CADET PROGRESS | 3-3 |
| | TRAINING COUNSELLING SESSION | 3-3 |
| | ADDITIONAL ASSESSMENT OF LEARNING ACTIVITIES | 3-3 |
| | PROFICIENCY LEVEL FOUR QUALIFICATION STANDARD | 3-3 |
| | CADETS NOT MEETING THE QUALIFICATION STANDARD | 3-4 |
| | RECORDING AND REPORTING CADET ACHIEVEMENT | 3-4 |
| | PROFICIENCY LEVEL FOUR CERTIFICATE OF QUALIFICATION | 3-4 |
| | Annex A – CHARACTERISTICS OF CADET PROGRAM DEVELOPMENTAL PERIODS | 3A-1 |
| | Annex B – ASSESSMENT OF LEARNING PLAN – PROFICIENCY LEVEL FOUR | 3B-1 |
| | Appendix 1 – 403 PC ASSESSMENT INSTRUCTIONS | 3B1-1 |
| | Appendix 2 – 404 PC ASSESSMENT INSTRUCTIONS | 3B2-1 |
| | Appendix 3 – 408 PC ASSESSMENT INSTRUCTIONS | 3B3-1 |
| | Appendix 4 – 409 PC ASSESSMENT INSTRUCTIONS | 3B4-1 |
| | Appendix 5 – 429 PC ASSESSMENT INSTRUCTIONS | 3B5-1 |
| | Appendix 6 – AVIATION SUBJECTS–COMBINED ASSESSMENT PC ASSESSMENT INSTRUCTIONS | 3B6-1 |
| | Appendix 7 – 490 PC ASSESSMENT INSTRUCTIONS | 3B7-1 |
| | Annex C – PROFICIENCY LEVEL FOUR QUALIFICATION RECORD | 3C-1 |

**TABLE OF CONTENTS (Cont)**


| | | PAGE |
|---|---|---|
| | Annex D – CADET INTERVIEW GUIDELINES | 3D-1 |
| | Appendix 1 – CADET INTERVIEW FORM | 3D1-1 |
| | Annex E – TRAINING COUNSELLING SESSION GUIDELINES | 3E-1 |
| | Appendix 1 – TRAINING COUNSELLING SESSION FORM | 3E1-1 |
| **CHAPTER 4** | **PERFORMANCE OBJECTIVES** | **4-400-1** |
| **SECTION 1** | **PO 400 – PARTICIPATE IN *POSITIVE SOCIAL RELATIONS FOR YOUTH* TRAINING** | **4-400-1** |
| **SECTION 2** | **PO X01 – PARTICIPATE IN CITIZENSHIP ACTIVITIES** | **4-X01-1** |
| **SECTION 3** | **PO X02 – PERFORM COMMUNITY SERVICE** | **4-X02-1** |
| **SECTION 4** | **PO 403 – ACT AS A TEAM LEADER** | **4-403-1** |
| | EO M403.01 – DESCRIBE NEEDS AND EXPECTATIONS OF TEAM MEMBERS | 4-M403.01-1 |
| | EO M403.02 – SELECT A LEADERSHIP APPROACH | 4-M403.02-1 |
| | EO M403.03 – MOTIVATE TEAM MEMBERS | 4-M403.03-1 |
| | EO M403.04 – PROVIDE FEEDBACK TO TEAM MEMBERS | 4-M403.04-1 |
| | EO M403.05 – PARTICIPATE IN A MENTORING RELATIONSHIP | 4-M403.05-1 |
| | EO M403.06 – ACT AS A TEAM LEADER DURING A LEADERSHIP APPOINTMENT | 4-M403.06-1 |
| | EO C403.01 – PARTICIPATE IN A LEADERSHIP SEMINAR | 4-C403.01-1 |
| **SECTION 5** | **PO X04 – TRACK PARTICIPATION IN PHYSICAL ACTIVITIES** | **4-X04-1** |
| **SECTION 6** | **PO X05– PARTICIPATE IN PHYSICAL ACTIVITIES** | **4-X05-1** |
| **SECTION 7** | **PO 406 – FIRE THE CADET AIR RIFLE DURING RECREATIONAL MARKSMANSHIP** | **4-406-1** |
| | EO M406.01 – PARTICIPATE IN A RECREATIONAL MARKSMANSHIP ACTIVITY | 4-M406.01-1 |
| | EO C406.01 – ASSIST THE RANGE SAFETY OFFICER (RSO) | 4-C406.01-1 |
| | EO C406.02 – SCORE AIR RIFLE MARKSMANSHIP TARGETS | 4-C406.02-1 |
| **SECTION 8** | **PO 407 – SERVE IN AN AIR CADET SQUADRON** | **4-407-1** |
| | EO M407.01 – DISCUSS PROFICIENCY LEVEL FOUR TRAINING OPPORTUNITIES | 4-M407.01-1 |
| | EO M407.02 – DISCUSS YEAR FOUR CADET SUMMER TRAINING CENTRE (CSTC) TRAINING OPPORTUNITIES | 4-M407.02-1 |
| | EO C407.01 – PREPARE FOR A MERIT REVIEW BOARD | 4-C407.01-1 |
| **SECTION 9** | **PO 408 – COMMAND A FLIGHT ON PARADE** | **4-408-1** |
| | EO M408.01 – DISCUSS COMMANDING A FLIGHT ON PARADE | 4-M408.01-1 |
| | EO M408.02 – IDENTIFY PARADE SEQUENCE | 4-M408.02-1 |
| | EO M408.03 – COMMAND A SQUAD | 4-M408.03-1 |
| | EO M408.04 – INSPECT A CADET ON PARADE | 4-M408.04-1 |
| | EO C408.01 – DISCUSS THE HISTORY OF DRILL | 4-C408.01-1 |

**TABLE OF CONTENTS (Cont)**


| | | PAGE |
|---|---|---|
| | EO C408.02 – VIEW A RE-ENACTMENT THAT DEMONSTRATES THE HISTORY OF DRILL | 4-C408.02-1 |
| **SECTION 10** | **PO 409 – INSTRUCT A LESSON** | **4-409-1** |
| | EO M409.01 – IDENTIFY METHODS OF INSTRUCTION | 4-M409.01-1 |
| | EO M409.02 – IDENTIFY ELEMENTS OF A POSITIVE LEARNING ENVIRONMENT | 4-M409.02-1 |
| | EO M409.03 – DESCRIBE LEARNER NEEDS | 4-M409.03-1 |
| | EO M409.04 – EXPLAIN ASSESSMENT | 4-M409.04-1 |
| | EO M409.05 – INSTRUCT A 30-MINUTE LESSON | 4-M409.05-1 |
| | EO C409.01 – PLAN A LESSON | 4-C409.01-1 |
| | EO C409.02 – INSTRUCT A 30-MINUTE LESSON | 4-C409.02-1 |
| | EO C409.03 – ACT AS AN ASSISTANT INSTRUCTOR | 4-C409.03-1 |
| | EO C409.04 – PARTICIPATE IN A CREATIVE LESSON-PLANNING WORKSHOP | 4-C409.04-1 |
| | EO C409.05 – ACT AS AN ASSISTANT DRILL INSTRUCTOR | 4-C409.05-1 |
| | EO C409.06 – INSTRUCT A 30-MINUTE DRILL LESSON | 4-C409.06-1 |
| **SECTION 11** | **PO X20 – PARTICIPATE IN CAF FAMILIARIZATION ACTIVITIES** | **4-X20-1** |
| **SECTION 12** | **PO 429 – COMMUNICATE USING RADIO PROCEDURES FOR AVIATION TRANSMISSION** | **4-429-1** |
| | EO C429.01 – EXPLAIN REGULATIONS AND OPERATING PROCEDURES FOR AVIATION TRANSMISSION AND LICENSING | 4-C429.01-1 |
| | EO C429.02 – COMMUNICATE USING RADIO PROCEDURES FOR AVIATION TRANSMISSION | 4-C429.02-1 |
| | EO C429.03 – DESCRIBE RADIO WAVELENGTHS, SIGNALS, LICENCES AND EQUIPMENT | 4-C429.03-1 |
| | EO C429.04 – EXPLAIN EMERGENCY, URGENCY AND SAFETY COMMUNICATIONS | 4-C429.04-1 |
| **SECTION 13** | **PO 431 – EXPLAIN PRINCIPLES OF FLIGHT** | **4-431-1** |
| | EO M431.01 – EXPLAIN FEATURES OF WING DESIGN | 4-M431.01-1 |
| | EO M431.02 – DESCRIBE FLIGHT INSTRUMENTS | 4-M431.02-1 |
| | EO C431.01 – EXPLAIN FLIGHT PERFORMANCE FACTORS | 4-C431.01-1 |
| | EO C431.02 – DEMONSTRATE TURNS, CLIMBS AND DESCENTS IN A FLIGHT SIMULATOR | 4-C431.02-1 |
| | EO C431.03 – FLY A RADIO-CONTROLLED AIRCRAFT | 4-C431.03-1 |
| **SECTION 14** | **PO 432 – DESCRIBE AERO ENGINE SYSTEMS** | **4-432-1** |
| | EO M432.01 – DESCRIBE FUEL SYSTEMS | 4-M432.01-1 |
| | EO M432.02 – DESCRIBE PROPELLER SYSTEMS | 4-M432.02-1 |
| | EO M432.03 – DESCRIBE ENGINE INSTRUMENTS | 4-M432.03-1 |
| | EO C432.01 – DESCRIBE IGNITION AND ELECTRICAL SYSTEMS | 4-C432.01-1 |
| | EO C432.02 – DESCRIBE TURBOCHARGING AND SUPERCHARGING SYSTEMS | 4-C432.02-1 |
| | EO C432.03 – DESCRIBE GAS TURBINE ENGINES | 4-C432.03-1 |

**TABLE OF CONTENTS (Cont)**


| | | PAGE |
|---|---|---|
| **SECTION 15** | **PO 436 – EXPLAIN ASPECTS OF METEOROLOGY** | **4-436-1** |
| | EO M436.01 – EXPLAIN WINDS | 4-M436.01-1 |
| | EO M436.02 – DESCRIBE AIR MASSES AND FRONTS | 4-M436.02-1 |
| | EO C436.01 – EXPLAIN FOG | 4-C436.01-1 |
| | EO C436.02 – DESCRIBE SEVERE WEATHER CONDITIONS | 4-C436.02-1 |
| | EO C436.03 – ANALYZE WEATHER INFORMATION | 4-C436.03-1 |
| **SECTION 16** | **PO 437 – EXPLAIN ASPECTS OF AIR NAVIGATION** | **4-437-1** |
| | EO M437.01 – DEFINE AIR NAVIGATION TERMS | 4-M437.01-1 |
| | EO M437.02 – DESCRIBE THE MAGNETIC COMPASS | 4-M437.02-1 |
| | EO C437.01 – SOLVE NAVIGATION PROBLEMS WITH A MANUAL FLIGHT COMPUTER | 4-C437.01-1 |
| | EO C437.02 – USE A VISUAL FLIGHT RULES (VFR) NAVIGATION CHART (VNC) | 4-C437.02-1 |
| **SECTION 17** | **PO 440 – DISCUSS AEROSPACE STRUCTURES** | **4-440-1** |
| | EO M440.01 – IDENTIFY AEROSPACE MATERIALS | 4-M440.01-1 |
| | EO M440.02 – DESCRIBE CANADIAN SATELLITES | 4-M440.02-1 |
| | EO C440.01 – DESCRIBE MODEL ROCKETRY | 4-C440.01-1 |
| | EO C440.02 – LAUNCH A SMALL MODEL ROCKET | 4-C440.02-1 |
| | EO C440.03 – DISCUSS CHARACTERISTICS OF THE PLANETS IN THE SOLAR SYSTEM | 4-C440.03-1 |
| | EO C440.04 – APPLY THE MATERIAL SCIENCE OF TRUSSES | 4-C440.04-1 |
| | EO C440.05 – DESCRIBE ROBOTICS | 4-C440.05-1 |
| | EO C440.06 – USE STAR CHARTS | 4-C440.06-1 |
| | EO C440.07 – OPERATE A TELESCOPE | 4-C440.07-1 |
| | EO C440.08 – WATCH *BLAST! (BALLOON-BORNE LARGE APERTURE SUB- MILLIMETRE TELESCOPE*) | 4-C440.08-1 |
| | EO C440.09 – DESCRIBE THE RELATIONSHIP BETWEEN GRAVITY AND SPACE-TIME | 4-C440.09-1 |
| | EO C440.10 – DISCUSS KINETIC AND POTENTIAL ENERGY | 4-C440.10-1 |
| | EO C440.11 – WATCH *EINSTEIN'S BIG IDEA* | 4-C440.11-1 |
| **SECTION 18** | **PO 460 – DESCRIBE AERODROME OPERATIONS CAREER OPPORTUNITIES** | **4-460-1** |
| | EO C460.01 – DESCRIBE AERODROME OPERATIONS CAREER OPPORTUNITIES | 4-C460.01-1 |
| | EO C460.02 – DESCRIBE AIR TRAFFIC CONTROL (ATC) CAREER OPPORTUNITIES | 4-C460.02-1 |
| | EO C460.03 – DESCRIBE AIRPORT SECURITY CAREER OPPORTUNITIES | 4-C460.03-1 |
| **SECTION 19** | **PO 470 – DISCUSS ASPECTS OF AIRCRAFT MANUFACTURING AND MAINTENANCE** | **4-470-1** |
| | EO C470.01 – DISCUSS AIRCRAFT MANUFACTURERS | 4-C470.01-1 |
| | EO C470.02 – DISCUSS AIRCRAFT ASSEMBLY | 4-C470.02-1 |

**TABLE OF CONTENTS (Cont)**


| | | PAGE |
|---|---|---|
| | EO C470.03 – IDENTIFY AVIATION HARDWARE | 4-C470.03-1 |
| | EO C470.04 – DISASSEMBLE AND REASSEMBLE A SMALL ENGINE | 4-C470.04-1 |
| **SECTION 20** | **PO 490 – PARTICIPATE IN AN AIRCREW SURVIVAL EXERCISE** | **4-490-1** |
| | EO M490.01 – ASSEMBLE AN EMERGENCY SURVIVAL KIT | 4-M490.01-1 |
| | EO M490.02 – OPERATE A STOVE AND A LANTERN | 4-M490.02-1 |
| | EO M490.03 – TIE KNOTS AND LASHINGS | 4-M490.03-1 |
| | EO M490.04 – NAVIGATE TO A WAYPOINT USING A GLOBAL POSITIONING SYSTEM (GPS) RECEIVER | 4-M490.04-1 |
| | EO M490.05 – LIGHT FIRES USING IMPROVISED IGNITION | 4-M490.05-1 |
| | EO C490.01 – DESCRIBE CLIMATIC AND SEASONAL CONCERNS | 4-C490.01-1 |
| | EO C490.02 – IMPROVISE TOOLS FOR USE IN A SURVIVAL SITUATION | 4-C490.02-1 |
| | EO C490.03 – MOVE A CASUALTY TO SHELTER | 4-C490.03-1 |
| | EO C490.04 – PRACTICE SAFE TOOLCRAFT | 4-C490.04-1 |
| | EO C490.05 – NAVIGATE A ROUTE USING A MAP AND COMPASS | 4-C490.05-1 |
| | EO C490.06 – ERECT, TEAR DOWN AND PACK TENTS | 4-C490.06-1 |
| | EO C490.07 – CONSTRUCT A HOOTCHIE OR LEAN-TO-STYLE SHELTER | 4-C490.07-1 |
| | Annex A – INSTRUCTIONAL METHODOLOGIES AND THEIR APPLICATIONS | 4A-1 |

THIS PAGE INTENTIONALLY LEFT BLANK

# CHAPTER 1
# GENERAL

## AIM

1. The aim of Proficiency Level Four is to provide an Air Cadet with the theoretical knowledge and practical experience required to participate in squadron activities and appointments as a team leader.

## PROGRAM DESIGN

2. The Proficiency Level Four Program has been designed:

   a. assuming that the majority of fourth year cadets are between 15 and 16 years of age;

   b. assuming that the majority of cadets have successfully completed Proficiency Level Three;

   c. using age-appropriate learning strategies;

   d. using 30 minutes as a standard period of instruction;

   e. by providing a programming mix consisting of mandatory and complementary training;

   f. to include training which is experiential and skill-based, with a lesser focus on theoretical knowledge; and

   g. assuming that learning will take place through a combination of programmed periods of instruction, unstructured discussions, teachable moments, and coaching / mentoring opportunities.

3. Each proficiency level is composed of performance objectives (POs) subdivided into enabling objectives (EOs).

## PERFORMANCE OBJECTIVES

4. PO numbers are usually made up of three digits:

   a. The first digit indicates the proficiency level (eg, ‘X’ represents Proficiency Levels One to Four, ‘1’ represents Proficiency Level One, ‘2’ represents Proficiency Level Two, etc.).

   b. The second and third digits indicate the topic area (eg, ‘00’ represents Positive Social Relations for Youth, ‘01’ represents Citizenship, ‘02’ represents Community Service, etc.).

5. EO numbers are usually made up of six digits (eg, EO M103.01):

   a. The first digit is either an ‘M’, which indicates mandatory training, or a ‘C’, which indicates complementary training.

   b. The second, third and fourth digits indicate the PO as per para 4.

   c. The fifth and sixth digits indicate the specific EO number (eg, EO M103.01 is the first mandatory EO in Proficiency Level One leadership).

   d. Some EOs have a seventh digit, which indicates there is a selection of EOs to choose from (eg, EOs MX01.01A, MX01.01B, MX01.01C, etc. indicates squadrons can choose any one of these EOs to satisfy the requirements of mandatory Citizenship training).

6. Each PO has been developed to contribute directly to the program aim and participant outcomes detailed in CATO 11-03, *Cadet Program Mandate*. The following are summaries of the POs common to all elements of the CP (allocated POs numbered 400 to X20) and the POs specific to Proficiency Level Four (allocated POs numbered 429 to 490):

a. **Positive Social Relations for Youth.** PO 400 – Participate in Positive Social Relations for Youth Training. The aim of Positive Social Relations for Youth is to prepare cadets to interact comfortably within the cadet community, interact positively with others, exercise sound judgement, accept personal responsibility for actions and choices, deal with interpersonal conflict, and seek assistance from available resources when needed.

b. **Citizenship.** PO X01 – Participate in Citizenship Activities. The aim of this PO is to introduce cadets to various aspects of being a good Canadian citizen through a range of fun, interesting and challenging activities.

c. **Community Service.** PO X02 – Perform Community Service. The aim of this PO is to encourage cadets to be active citizens through participation as a team leader in a local community service activity.

d. **Leadership.** PO 403 – Act as a Team Leader. The aim of this PO is to provide cadets with knowledge and skills to practice team leadership during naturally occurring leadership opportunities.

e. **Personal Fitness and Healthy Living.** PO X04 – Track Participation in Physical Activities. The aim of this PO is to encourage cadets to live a healthy, active lifestyle by meeting the *Canadian Physical Activity Guidelines* and *Canadian Sedentary Behaviour Guidelines* for youth.

f. **Physical Activities.** PO X05 – Participate in Physical Activities. The aim of this PO is for cadets to have fun participating in physical activities.

g. **Air Rifle Marksmanship.** PO 406 – Fire the Cadet Air Rifle During Recreational Marksmanship. The aim of this PO is to develop cadets' marksmanship abilities through participation in recreational marksmanship.

h. **General Cadet Knowledge.** PO 407 – Serve in an Air Cadet Squadron. The aim of this PO is to provide cadets with information on the opportunities inherent in the Air CP.

i. **Drill.** PO 408 – Command a Flight on Parade. The aim of this PO is to provide cadets with the knowledge and skills to act as a team leader while commanding a flight on parade.

j. **Instructional Techniques.** PO 409 – Instruct a Lesson. The aim of this PO is to provide cadets with the knowledge and skills to instruct a 30-minute lesson.

k. **CAF Familiarization.** PO X20 – Participate in Canadian Armed Forces (CAF) Familiarization Activities. The aim of this PO is to stimulate the interest of cadets in the sea, land and air activities of the CAF.

l. **Radio Communication.** PO 429 – Communicate Using Radio Procedures for Aviation Transmission. The aim of this PO is to have the cadets communicate using radio procedures for aviation transmission and provide the cadets with the ability to obtain the Industry Canada Restricted Operator Certificate with Aeronautical Qualification (ROC-A).

m. **Principles of Flight.** PO 431 – Explain Principles of Flight. The aim of this PO is to further develop knowledge of principles of flight.

n. **Propulsion.** PO 432 – Describe Aero Engine Systems. The aim of this PO is to further develop knowledge of propulsion.

o. **Meteorology.** PO 436 – Explain Aspects of Meteorology. The aim of this PO is to further develop the knowledge of meteorology and its implication for aviation.

p. **Air Navigation.** PO 437 – Explain Aspects of Air Navigation. The aim of this PO is to further develop skills in air navigation.

q. **Aerospace.** PO 440 – Discuss Aerospace Structures. The aim of this PO is to introduce the cadets to aerospace materials and Canadian satellites.

r. **Aerodrome Operations.** PO 460 – Describe Aerodrome Operations Career Opportunities. The aim of this PO is to have the cadets describe airport operations career opportunities.

s. **Aircraft Manufacturing and Maintenance.** PO 470 – Discuss Aspects of Aircraft Manufacturing and Maintenance. The aim of this PO is to have the cadets discuss aspects of aircraft manufacturing and maintenance and participate in a complementary activity.

t. **Aircrew Survival.** PO 490 – Participate in an Aircrew Survival Exercise. The aim of this PO is to further develop the cadets' survival skills.

**TRAINING PREREQUISITES**

7. To participate in Proficiency Level Four, youths must be members of an Air Cadet squadron, as specified in A-CR-CCP-950/PT-001, *Queen's Regulations and Orders for the Canadian Cadet Organization*, Article 4.01.

**USE OF THE QSP**

8. This QSP shall be used as the primary authority governing the development, implementation, conduct and evaluation of the training and standards to qualify a cadet as Proficiency Level Four. This QSP shall also be used by the Directorate Cadets and Junior Canadian Rangers as the primary reference for validation of Proficiency Level Four qualification training.

9. Proficiency Level Four shall be conducted using this QSP as the training control document in conjunction with A-CR-CCP-804/PF-001, *Royal Canadian Air Cadets Proficiency Level Four Instructional Guides*.

10. Any deviation from the requirements detailed in this publication due to training limitations must be approved by D Cdts 3, Senior Staff Officer Youth Programs Development, NDHQ.

THIS PAGE INTENTIONALLY LEFT BLANK

# CHAPTER 2

# TRAINING MANAGEMENT DETAILS

## RESPONSIBLE AGENCY AND TRAINING ESTABLISHMENTS

1. The Managing Authority for the Air Cadet Proficiency Level Program is D Cdts & JCR. The conduct of said program is the responsibility of the Regional Cadet Support Units (RCSUs) through authorized Training Establishments (TEs). These TEs include:

a. Royal Canadian Air Cadet Squadrons (RCACS); and

b. Technical TEs, such as:

(1) Regional Cadet Air Operations (RCAOPS); and

(2) Other zone, detachment or regional TEs as authorized by the RCSU Commanding Officer (CO).

## TRAINING DETAILS

2. In accordance with CATOs 11-04, *Cadet Program Outline* and 51-01, *Air Cadet Program Outline*, the Proficiency Level Program is conducted between 1 September and 30 June of each training year through a combination of 30 training sessions and 10 supported training days as detailed in Annex A.

3. The Proficiency Level Program is divided into two compulsory components that must be completed by all cadets. These components are:

a. **Mandatory Training**. Mandatory training is a scheme of activities that is requisite for squadrons, and in some instances, specialized TEs, to conduct and for cadets to accomplish in order to complete the Proficiency Level Program; and

b. **Complementary Training**. Complementary training is a scheme of activities that is requisite for squadrons, and in some instances specialized TEs, to conduct and for cadets to accomplish in order to complete the Proficiency Level Program. These activities complement mandatory activities and form an integral part of the Proficiency Level Program. COs have the discretion to choose activities from a range of possibilities, thus allowing them flexibility to tailor the Proficiency Level Program to match the squadron's interests and resources.

4. **Period Allocation**. Periods are 30 minutes in duration with some periods allocated to be instructed in a field environment during supported weekends. A detailed period allocation, including details on training days / weekend, is provided at Annex A, and scheduling guidelines are located at Annex B.

5. **Training Days / Weekends**.

a. The planning and conduct of training days is the responsibility of the squadron. Day training shall be conducted at the squadron parade location or, where suitable facilities do not exist at the squadron parade location, within the local community.

b. The conduct of the familiarization flight and elemental day are normally the responsibility of Technical TEs (RCAOPS). The planning of these activities is to be done in conjunction with the Area Cadet Detachment / RCSU and RCAOPS.

c. In accordance with CATO 11-04, *Cadet Program Outline*, weekend training shall normally be conducted within 300 kilometres of the squadron parade location.

d. Where support of mandatory or complementary days / weekends is required, requests shall be forwarded to the appropriate RCSU. Refer to CATO 51-01, *Air Cadet Program Outline*, and regional orders for amplified information on support available from RCSUs.

e. Training days and weekends shall be structured, unless otherwise specified in the individual Proficiency Level QSP, to include cadets from all levels of the Proficiency Level Program.

6. **Training Capacity**. The training capacity is limited to the ability of the squadron to meet supervision requirements in accordance with CATO 13-12, *Supervision of Cadets*, and other applicable policies (eg, A-CR-CCP-951/PT-002).

7. **Training Staff Requirements.**

a. Squadron Training Officer (Trg O):

| RANK | MOSID | NUMBER | QUALIFICATION |
|---|---|---|---|
| Capt | 00232-03 | 1 | Minimum:<br>Captain Qualification; or<br>CIC Intermediate Officer Qualification.<br>Preferred:<br>CIC Training Officer (Corps / Squadron) Qualification; and<br>CIC Occupational Specialty Senior Instructor Qualification. |

b. Proficiency Level Four Course Officer (PL4 Crse O):

| RANK | MOSID | NUMBER | QUALIFICATION |
|---|---|---|---|
| Lt / 2Lt | 00232-03 | 1 | Minimum:<br>Basic Officer Qualification; or<br>CIC Basic Military Officer Qualification and Basic Military Occupational Qualification.<br>Preferred:<br>Military Occupation Course (Air); or<br>CIC Basic Military Officer Qualification (Air). |

c. Instructors:

| RANK | MOSID | NUMBER | QUALIFICATION |
|---|---|---|---|
| Cadet FSgt and above | N/A | 1 per 10 cadets | Minimum:<br>Completion of Proficiency Level Four.<br>Preferred:<br>CSTC specialties appropriate for activity requirements (eg, Fitness and Sports Instructor to instruct Physical Activities PO X05). |

8. **Technical Specialists**. The number of technical specialists required is influenced by policy documentation specific to the activity (eg, CATOs, Water Safety Orders, Adventure Training Safety Standards, etc.) and by local circumstances. The technical specialists that support Proficiency Level Four are:

a. Required Specialist Instructors:

(1) Unit Cadet Conflict Management Advisor (UCCMA) to coordinate training delivery and learning reinforcement for PO 400;

(2) Range Safety Officer (RSO) in support of PO 406 and PO 311;

b. Possible Cadet Specialist Instructors:

(1) Fitness and Sports Instructor(s) as available in support of PO X04 and PO X05;

(2) Air Rifle Marksmanship Instructor(s) as available in support of PO 406 and PO 311;

(3) Drill and Ceremonial Instructor(s) as available in support of PO 408;

(4) Advanced Aviation Instructor(s) as available in support of POs 429, 431, 432, 436, and 437;

(5) Advanced Aerospace Instructor(s) as available in support of PO 440; and

(6) Survival Instructor(s) as available in support of PO 490; and

c. guest speaker(s) as required.

9. **Resource Requirements**. RCSU COs are responsible for ensuring that required equipment and supplies are available. A list of material required to conduct the training is located at Chapter 2, Annex C.

**TRAINING ADMINISTRATION**

10. **Cadet Evaluation**. Details on cadet evaluation are found in Chapter 3.

11. **Reports**. A training file should be maintained on each cadet to record their progress during the training year. The training file should consist, as a minimum, of a Proficiency Level Four Qualification Record (Chapter 3, Annex B). Training files are temporary documents which may be disposed of upon migration of the Proficiency Level Four Qualification Record to DND 2399, *Cadet Personnel Record*.

**QUALIFICATION**

12. The Proficiency Level Four qualification is awarded to cadets upon completion of the requirements specified in Chapter 3.

**RELATED DOCUMENTS**

13. This QSP is to be used in conjunction with:

    a. CATOs; and

    b. A-CR-CCP-804/PF-001, *Proficiency Level Four Instructional Guides*.

**REFERENCES**

14. A list of references used in this QSP is located at Annex D.

## ANNEX A

## PROFICIENCY LEVEL FOUR TRAINING SUMMARY AND TIME ALLOCATION

**PERIOD ALLOCATION**

| PO No. | Performance Objective | EO No. | Enabling Objective | No. of Pd |
|---|---|---|---|---|
| 400 | Participate in *Positive Social Relations for Youth* Training | N/A | Sub-Module 1—Your Responsibility as a Leader to Influence Positive Social Relations | 2 |
| | | N/A | Sub-Module 2—What Complaints and Consent Are and How to Practice Risk Reduction | 2 |
| | | N/A | Sub-Module 3—Your Responsibility as a Leader to Help Manage Conflict | 2 |
| | | | **PO 400 - Total Mandatory** | **6** |
| | | | **PO 400 - Total Complementary** | **0** |
| X01 | Participate in Citizenship Activities | MX01.01A | Participate in a Citizenship Tour | - |
| | | MX01.01B | Attend a Presentation by a Community Organization | - |
| | | MX01.01C | Attend a Presentation by a Citizen-of-Interest | - |
| | | MX01.01D | Participate in the Canadian Citizenship Challenge | - |
| | | MX01.01E | Host a Citizenship Ceremony | - |
| | | MX01.01F | Participate in an Election | - |
| | | MX01.01G | Participate in Heritage Minutes Video Activities | - |
| | | MX01.01H | Participate in Citizenship Learning Stations | - |
| | | CX01.01 | Participate in Citizenship Activities | 18 |
| | | | **PO X01 - Total Mandatory** | **3** |
| | | | **PO X01 - Total Complementary** | **18** |
| X02 | Perform Community Service | MX02.01 | Perform Community Service | 9 |
| | | CX02.01 | Perform Community Service | 18 |
| | | | **PO X02 - Total Mandatory** | **9** |
| | | | **PO X02 - Total Complementary** | **18** |
| 403 | Act as a Team Leader | M403.01 | Describe Needs and Expectations of Team Members | 1 |
| | | M403.02 | Select a Leadership Approach | 2 |
| | | M403.03 | Motivate Team Members | 2 |
| | | M403.04 | Provide Feedback to Team Members | 2 |
| | | M403.05 | Participate in a Mentoring Relationship | 2 |
| | | M403.06 | Act as a Team Leader During a Leadership Appointment | 1 |
| | | 403 PC | | 0 |
| | | C403.01 | Participate in a Leadership Seminar | 4 x 3 |

| PO No. | Performance Objective | EO No. | Enabling Objective | No. of Pd |
|---|---|---|---|---|
| | | C303.01 | Lead a Team-Building Activity | 3 |
| | | C303.02 | Deliver a Presentation About a Leader | 2 |
| | | | **PO 403 - Total Mandatory** | **10** |
| | | | **PO 403 - Total Complementary** | **17** |
| X04 | Track Participation in Physical Activities | MX04.01 | Participate in 60 Minutes of Moderate- to Vigorous-Intensity Physical Activity (MVPA) and Track Participation in Physical Activities | 3 |
| | | MX04.02 | Identify Strategies to Improve Participation in Physical Activities and Participate in the Cadet Fitness Assessment (CFA) | 3 |
| | | MX04.03 | Participate in the CFA and Identify Strategies for Improving Personal Physical Fitness | 3 |
| | | CX04.01 | Participate in the CFA and Identify Strategies for Improving Personal Physical Fitness | 3 |
| | | CX04.02 | Participate in Activities that Reinforce the Three Components of Physical Fitness | 3 |
| | | CX04.03 | Participate in a Cooking Class | 3 |
| | | CX04.04 | Attend a Personal Fitness and Healthy Living Presentation | 3 |
| | | CX04.05 | Attend a Local Amateur Sporting Event | 3 |
| | | | **PO X04 - Total Mandatory** | **9** |
| | | | **PO X04 - Total Complementary** | **15** |
| X05 | Participate in Physical Activities | MX05.01 | Participate in Physical Activities | 9 |
| | | CX05.01 | Participate in Physical Activities | 9 |
| | | CX05.02 | Participate in a Tournament | 9 |
| | | | **PO X05 - Total Mandatory** | **9** |
| | | | **PO X05 - Total Complementary** | **18** |
| 406 | Fire the Cadet Air Rifle During Recreational Marksmanship | M406.01 | Participate in a Recreational Marksmanship Activity | 3 |
| | | C406.01 | Assist the Range Safety Officer (RSO) | 1 |
| | | C406.02 | Score Air Rifle Marksmanship Targets | 1 |
| | | C306.01 | Identify Civilian Marksmanship Organizations | 1 |
| | | C306.02 | Correct Marksmanship Error | 2 |
| | | C306.03 | Adopt the Standing Position With the Cadet Air Rifle | 2 |
| | | C106.01 | Participate in a Recreational Marksmanship Activity | 6 |
| | | | **PO 406 - Total Mandatory** | **3** |
| | | | **PO 406 - Total Complementary** | **13** |

| PO No. | Performance Objective | EO No. | Enabling Objective | No. of Pd |
|---|---|---|---|---|
| 407 | Serve in an Air Cadet Squadron | M407.01 | Discuss Proficiency Level Four Training Opportunities | 1 |
| | | M407.02 | Discuss Year Four Cadet Summer Training Centre (CSTC) Training Opportunities | 1 |
| | | C407.01 | Prepare for a Merit Review Board | 3 |
| | | C407.02 | Describe the Application Procedure for National Courses and Exchanges | 1 |
| | | C307.01 | Participate in a Presentation Given by a Guest Speaker From the Regional Cadet Support Unit (RCSU) | 2 |
| | | C307.02 | Participate in a Presentation Given by the Cadet Liaison Officer (CLO) | 2 |
| | | C307.03 | Participate in a Presentation Given by a Guest Speaker from the Air Cadet League of Canada (ACLC) | 2 |
| | | C307.04 | Identify the Application Procedures for the Glider and Power Scholarships | 2 |
| | | C307.05 | Participate in a Presentation on the Duke of Edinburgh Award Program | 1 |
| | | | **PO 407 - Total Mandatory** | **2** |
| | | | **PO 407 - Total Complementary** | **13** |
| 408 | Command a Flight on Parade | M408.01 | Discuss Commanding a Flight on Parade | 1 |
| | | M408.02 | Identify Parade Sequence | 1 |
| | | M408.03 | Command a Squad | 1 |
| | | M408.04 | Inspect a Cadet on Parade | 1 |
| | | 408 PC | | 0 |
| | | C408.01 | Discuss the History of Drill | 1 |
| | | C408.02 | View a Re-Enactment That Demonstrates the Historical Use of Drill | 3 |
| | | C308.01 | Execute Flag Party Drill | 6 |
| | | C308.02 | Deliver Words of Command | 2 |
| | | C208.01 | Practice Ceremonial Drill as a Review | 2 |
| | | C208.02 | Execute Drill With Arms | 8 |
| | | | **PO 408 - Total Mandatory** | **4** |
| | | | **PO 408 - Total Complementary** | **22** |
| 409 | Instruct a Lesson | M409.01 | Identify Methods of Instruction | 2 |
| | | M409.02 | Identify Elements of a Positive Learning Environment | 2 |
| | | M409.03 | Describe Learner Needs | 2 |
| | | M409.04 | Explain Assessment | 1 |
| | | M409.05 | Instruct a 30-Minute Lesson | 3 |
| | | 409 PC | | 0 |
| | | C409.01 | Plan a Lesson | 2 |
| | | C409.02 | Instruct a 30-Minute Lesson | 3 |
| | | C409.03 | Act as an Assistant Instructor | 3 |

| PO No. | Performance Objective | EO No. | Enabling Objective | No. of Pd |
|---|---|---|---|---|
| | | C409.04 | Participate in a Creative Lesson-Planning Workshop | 3 |
| | | C409.05 | Act as an Assistant Drill Instructor | 3 |
| | | C409.06 | Instruct a 30-Minute Drill Lesson | 3 |
| | | C309.04 | Identify Formations for Drill Instruction | 1 |
| | | C309.05 | Plan a Drill Lesson | 2 |
| | | C309.06 | Instruct a 15-Minute Drill Lesson | 3 |
| | | | **PO 409 – Total Mandatory** | **10** |
| | | | **PO 409 – Total Complementary** | **23** |
| 311 | Participate in a Recreational Summer Biathlon Activity | C311.01 | Practice Aiming and Firing the Cadet Air Rifle Following Physical Activity | 3 |
| | | C311.02 | Participate in a Recreational Summer Biathlon Activity | 6 |
| | | C211.01 | Identify Civilian Biathlon Opportunities | 1 |
| | | C211.02 | Run on Alternate Terrain | 1 |
| | | C211.03 | Fire the Cadet Air Rifle Using a Sling Following Physical Activity | 1 |
| | | C211.04 | Participate in a Competitive Summer Biathlon Activity | 6 |
| | | C111.01 | Participate in a Biathlon Briefing | 1 |
| | | C111.02 | Run Wind Sprints | 1 |
| | | C111.03 | Fire the Cadet Air Rifle Following Physical Activity | 1 |
| | | C111.04 | Participate in a Recreational Summer Biathlon Activity | 6 |
| | | | **PO 311 – Total Mandatory** | **0** |
| | | | **PO 311 – Total Complementary** | **27** |
| X20 | Participate in Canadian Armed Forces (CAF) Familiarization Activities | MX20.01A | Participate in a CAF Activity | - |
| | | MX20.01B | Participate in a CAF Familiarization Tour | - |
| | | MX20.01C | Fire the C7 Rifle | - |
| | | MX20.01D | Participate in a Mess Dinner | - |
| | | MX20.01E | Attend a CAF Presentation | - |
| | | MX20.01F | Attend a CAF Commemorative Ceremony | - |
| | | MX20.01G | Participate in CAF Video Activities | - |
| | | MX20.01H | Participate in CAF Learning Stations | - |
| | | CX20.01 | Participate in CAF Familiarization Activities | 18 |
| | | | **PO X20 - Total Mandatory** | **6** |
| | | | **PO X20 - Total Complementary** | **18** |
| 429 | Communicate Using Radio Procedures for Aviation Transmission | C429.01 | Explain Regulations and Operating Procedures for Aviation Transmission and Licensing | 1 |
| | | C429.02 | Communicate Using Radio Procedures for Aviation Transmission | 1 |
| | | C429.03 | Describe Radio Wavelengths, Signals, Licences and Equipment | 1 |

| PO No. | Performance Objective | EO No. | Enabling Objective | No. of Pd |
|---|---|---|---|---|
| | | C429.04 | Explain Emergency, Urgency and Safety Communications | 1 |
| | | 429 PC | | 2 |
| | | | **PO 429 - Total Mandatory** | **0** |
| | | | **PO 429 - Total Complementary** | **6** |
| 431 | Explain Principles of Flight | M431.01 | Explain Features of Wing Design | 1 |
| | | M431.02 | Describe Flight Instruments | 2 |
| | | C431.01 | Explain Flight Performance Factors | 2 |
| | | C431.02 | Demonstrate Turns, Climbs and Descents in a Flight Simulator | 3 |
| | | C431.03 | Fly a Radio-Controlled Aircraft | 3 |
| | | | **PO 431 - Total Mandatory** | **3** |
| | | | **PO 431 - Total Complementary** | **8** |
| 432 | Describe Aero Engine Systems | M432.01 | Describe Fuel Systems | 1 |
| | | M432.02 | Describe Propeller Systems | 1 |
| | | M432.03 | Describe Engine Instruments | 1 |
| | | C432.01 | Describe Ignition and Electrical Systems | 1 |
| | | C432.02 | Describe Turbocharging and Supercharging Systems | 1 |
| | | C432.03 | Describe Gas Turbine Engines | 1 |
| | | | **PO 432 - Total Mandatory** | **3** |
| | | | **PO 432 - Total Complementary** | **3** |
| 436 | Explain Aspects of Meteorology | M436.01 | Explain Winds | 1 |
| | | M436.02 | Describe Air Masses and Fronts | 3 |
| | | C436.01 | Explain Fog | 1 |
| | | C436.02 | Describe Severe Weather Conditions | 1 |
| | | C436.03 | Analyze Weather Information | 3 |
| | | | **PO 436 - Total Mandatory** | **4** |
| | | | **PO 436 - Total Complementary** | **5** |
| 437 | Explain Aspects of Air Navigation | M437.01 | Define Air Navigation Terms | 2 |
| | | M437.02 | Describe the Magnetic Compass | 1 |
| | | 431 / 432 436 / 437 PC | Aviation Subjects–Combined Assessment | 1 |
| | | C437.01 | Solve Navigation Problems with a Manual Flight Computer | 2 |
| | | C437.02 | Use a Visual Flight Rules (VFR) Navigation Chart (VNC) | 2 |
| | | | **PO 437 - Total Mandatory** | **4** |
| | | | **PO 437 - Total Complementary** | **4** |
| 440 | Discuss Aerospace Structures | M440.01 | Identify Aerospace Materials | 1 |
| | | M440.02 | Describe Canadian Satellites | 1 |
| | | C440.01 | Describe Model Rocketry | 2 |

| PO No. | Performance Objective | EO No. | Enabling Objective | No. of Pd |
|---|---|---|---|---|
| | | C440.02 | Launch a Small Model Rocket | 3 |
| | | C440.03 | Discuss Characteristics of the Planets in the Solar System | 2 |
| | | C440.04 | Apply the Material Science of Trusses | 3 |
| | | C440.05 | Describe Robotics | 1 |
| | | C440.06 | Use Star Charts | 2 |
| | | C440.07 | Operate a Telescope | 2 |
| | | C440.08 | Watch *BLAST! (Balloon-Borne Large Aperture Sub-Millimetre Telescope)* | 3 |
| | | C440.09 | Describe the Relationship Between Gravity and Space-Time | 2 |
| | | C440.10 | Discuss Kinetic and Potential Energy | 1 |
| | | C440.11 | Watch *Einstein's Big Idea* | 5 |
| | | | **PO 440 - Total Mandatory** | **2** |
| | | | **PO 440 - Total Complementary (Max 9)** | **26** |
| 460 | Describe Aerodrome Operations Career Opportunities | C460.01 | Describe Aerodrome Operations Career Opportunities | 1 |
| | | C460.02 | Describe Air Traffic Control (ATC) Career Opportunities | 1 |
| | | C460.03 | Describe Airport Security Career Opportunities | 1 |
| | | | **PO 460 - Total Mandatory** | **0** |
| | | | **PO 460 – Total Complementary** | **3** |
| 470 | Discuss Aspects of Aircraft Manufacturing and Maintenance | C470.01 | Discuss Aircraft Manufacturers | 1 |
| | | C470.02 | Discuss Aircraft Assembly | 1 |
| | | C470.03 | Identify Aviation Hardware | 1 |
| | | C470.04 | Disassemble and Reassemble a Small Engine | 3 |
| | | | **PO 470 – Total Mandatory** | **0** |
| | | | **PO 470 – Total Complementary** | **6** |
| 490 | Participate in an Aircrew Survival Exercise | M490.01 | Assemble an Emergency Survival Kit | 1 |
| | | M490.02 | Operate a Stove and a Lantern | 3 |
| | | M490.03 | Tie Knots and Lashings | 2 |
| | | M490.04 | Navigate to a Waypoint Using a Global Positioning System (GPS) Receiver | 4 |
| | | M490.05 | Light Fires Using Improvised Ignition | 4 |
| | | 490 PC | | 0 |
| | | C490.01 | Describe Climatic and Seasonal Concerns | 1 |
| | | C490.02 | Improvise Tools for Use in a Survival Situation | 2 |
| | | C490.03 | Move a Casualty to Shelter | 3 |
| | | C490.04 | Practice Safe Toolcraft | 3 |
| | | C490.05 | Navigate a Route Using a Map and Compass | 4 |

| PO No. | Performance Objective | EO No. | Enabling Objective | No. of Pd |
|---|---|---|---|---|
| | | C490.06 | Erect, Tear Down and Pack Tents | 4 |
| | | C490.07 | Construct a Hootchie or Lean-to-Style Shelter | 3 |
| | | | **PO 490 – Total Mandatory Field** | **14** |
| | | | **PO 490 – Total Complementary** | **20** |
| N/A | Participate in the Annual Ceremonial Review (ACR) | | | **3** |
| | | | **Total Mandatory** | **86** |
| | | | **Total Mandatory Field** | **14** |
| | | | **Total Complementary** | **283** |

## TRAINING DAY / WEEKEND ALLOCATION

**MANDATORY**

| Activity | Description | Time |
|---|---|---|
| Mandatory Training Periods | 18 periods of instruction (9 per day) chosen from the mandatory EOs to be delivered during full days of training. POs X02, X05 and / or 406 are best suited for delivery during training days; however, the flexibility does exist for squadrons to deliver the POs that best suit their circumstances (i.e. infrastructure, resource availability, etc). | 2 Days |
| Demonstration Flight and Aviation Day | Every Proficiency Level Four cadet will be given an opportunity to experience a demonstration flight in an aircraft determined by RC Air Ops O. In addition to each demonstration flight, squadrons should maximize the training value of this allocated day by providing additional aviation training, such as lessons from POs 429 to 470. | 1 Day |
| Air Cadet Skills Day | One day where cadets will train in and practice various skills drawn from training, such as EOs MX05.01 (Participate in Physical Activities), M406.01 (Participate in a Recreational Marksmanship Activity), C431.03 (Fly a Radio-Controlled Aircraft), C436.03 (Analyze Weather Information), C437.01 (Solve Navigation Problems With a Manual Flight Computer), C440.07 (Operate a Telescope) and C470.04 (Disassemble and Reassemble a Small Engine). Squadrons may conduct this day with other squadrons and / or in a competition format. | 1 Day |
| Aircrew Survival Exercise | One weekend of mandatory support will be provided for cadet squadrons to participate in an overnight exercise to include the delivery of PO 490. | 1 Weekend |
| | **Total Mandatory** | **6 Days** |

**COMPLEMENTARY**

| Activity | Description | Time |
|---|---|---|
| Complementary Training Periods | 18 periods of instruction (9 per day) chosen from the complementary EOs to be delivered during full days of training. POs X02, X05 and / or 406 are best suited for delivery during training days; however, the flexibility does exist for squadrons to deliver the POs that best suit their circumstances (i.e. infrastructure, resource availability, etc). | 2 Days |
| **PLUS COMBINATION OF TWO DAYS FROM THE FOLLOWING** | | |
| Aviation Day | One day to provide additional aviation training, such as lessons from POs 429 to 470. | 1 Day |
| Air Cadet Skills Day | One day where cadets will train in and practice various skills drawn from training, such as CX05.01 (Participate in Physical Activities), CX05.02 (Participate in a Tournament), C106.01 (Participate in a Recreational Marksmanship Activity), C208.02 (Execute Drill With Arms), and C431.02 (Demonstrate Turns, Climbs and Descents in a Flight Simulator). Squadrons may conduct this day with other squadrons and / or in a competition format. | 1 Day |
| Aircrew Survival Exercise | One or two days or one weekend provided for squadrons to conduct additional training and practical experience in support of PO 490. | 1 or 2 Days or 1 Weekend |
| | **Total Complementary** | **4 Days** |

THIS PAGE INTENTIONALLY LEFT BLANK

# ANNEX B

## SCHEDULING GUIDELINES

1. Schedule those activities that are set dates (eg, Remembrance Day activities, Regionally Directed Activities, TE activities [eg, gliding], School Breaks).

2. Schedule major and recurring activities (eg, PO X05 [Physical Activities], CO's Parades, Aircrew Survival Exercises, Annual Ceremonial Review).

3. Schedule the following training activities early in the training year:

   a. PO 100 (Positive Social Relations for Youth),

   b. POs 107, 207, 307, 407 and 507 (General Cadet Knowledge),

   c. POs 303, 403 and 503 (Leadership), and

   d. POs 309 and 409 (Instructional Techniques).

4. Schedule any special considerations, such as:

   a. Schedule EO MX04.02 (Identify Strategies to Improve Participation in Physical Activities and Participate in the Cadet Fitness Assessment) four weeks after EO MX04.01 (Participate in 60 Minutes of Moderate- to Vigorous-Intensity Physical Activity and Track Participation in Physical Activities);

   b. Schedule EO M190.01 (Pack Personal Equipment for an Aircrew Survival Exercise) prior to the squadron's Aircrew Survival Exercise;

   c. Many EOs can be scheduled during training days / weekends (eg, most of PO X90 should be scheduled during the Aircrew Survival Exercise, many EOs from POs X30, X40, X60 and X70 can be scheduled during the Familiarization Flying and Aviation Day, and Air Cadet Skills Day);

   d. For the completion of POs 303, 403, and 503 (Leadership), consider leadership assignment opportunities for Proficiency Levels Three, Four and Five cadets; leadership appointment opportunities for Proficiency Levels Four and Five cadets; leadership project opportunities for Proficiency Level Five cadets; and

   e. Schedule each Proficiency Level Four cadet into the Proficiency Level One and Two training schedules in order to complete EO M409.05 (Instruct a 30-Minute Lesson).

5. Schedule the remaining mandatory training (details located in the lesson specifications in Chapter 4).

6. Schedule selected complementary training.

7. Other considerations when developing the annual training schedule include:

   a. the training environment required for each activity:

      (1) some activities will require an outdoor environment which requires consideration for seasonal climate; and

      (2) some activities will require the use of a special facility, such as a gymnasium or sports field; and

   b. the availability of a technical specialist, if required to conduct the activity;

8. Considerations when implementing the training program:

   a. Some theory is required for safety purposes and for introducing new material. However, most material can be taught using practical methods.

   b. Training sessions need to be planned in advance to allow instructors adequate time to prepare for the delivery and conduct of training. This includes reviewing lesson specifications and instructional guides, and creating instructional materials as required.

   c. Take adequate time to allow cadets to reflect upon and be debriefed on experiential training activities, to include future applications of the experience.

## ANNEX C

## RESOURCE REQUIREMENTS

Quantities are based on a group of 30 cadets.

The resources required for complementary training and POs X01, X02, X04, X05 and X20 depend on the activities selected by the squadron. Refer to A-CR-CCP-804/PF-001, *Royal Canadian Air Cadets Proficiency Level Four Instructional Guides* for detailed lists of resources for each selected activity.

The following is a list of key items all squadrons require access to for the conduct of training.

| Item | Quantity | PO/EO |
|---|---|---|
| DVD Player | 1 | 400/X01/X05 |
| Television | 1 | 400/X01/X05 |
| Projector | 1 | 400 |
| CD Player | 1 | X04 |
| Leger's 20-m Shuttle Run Test CD | 1 | X04 |
| Measuring tape | 1 | X04 |
| Masking tape | 1 | X04 |
| 12-cm measuring strip | 15 | X04 |
| Pylons | 30 | X04 |
| Gym mats | 15 | X04 |
| Cardboard / wooden box approximately 30 cm high | 15 | X04 |
| Metre stick | 15 | X04 |
| First Aid Kit | 1 | X05/490 |
| Sunscreen - SPF 30 (minimum) | 1 | X05/490 |
| Insect Repellent | 1 | X05/490 |
| Cadet Air Rifle - Five-shot clip | 45 | 406 |
| Cadet Air Rifle - Rifle | 15 | 406 |
| Cadet Air Rifle - Safety Rod | 15 | 406 |
| Cadet Air Rifle - Single Pellet Adaptor | 15 | 406 |
| Marksmanship mats | 15 | 406 |
| Pellets - .177 calibre Air Rifle (250 Pack) | 6 | 406 |
| Pellets - .177 calibre Cleaning Pellets (80 Pack) | 1 | 406 |
| Pellet container | 15 | 406 |
| Safety goggles/glasses | 15 | 406 |
| Target - Grouping Target CCT2000GRTD | 150 | 406 |
| Target Frame | 15 | 406 |
| Stopwatch | 1 | M409.03 |
| Whistle | 1 | M409.03 |
| Model of a wing | 1 | M431.01 |
| Gyroscope | 1 | M431.02 |
| Large mock-up of an altimeter | 1 | M431.02 |
| Large mock-up of an ASI | 1 | M431.02 |
| Large mock-up of an VSI | 1 | M431.02 |
| Baby food jar (empty) | 2 | M436.02 |
| Blue food colour | 1 | M436.02 |
| Index card / plastic coated paper | 1 | M436.02 |
| Measuring cup (1 cup) | 2 | M436.02 |

| Item | Quantity | PO/EO |
|---|---|---|
| Red food colour | 1 | M436.02 |
| Douglas protractor | 30 | M437.01 |
| Large globe with latitude and longitude markings | 1 | M437.01 |
| Local VFR Navigation Chart (VNC) | 30 | M437.01 |
| Examples (set) of magnetic compasses | 1 | M437.02 |
| Aluminum (sample piece) | 1 | M440.01 |
| Aramid (sample piece) | 1 | M440.01 |
| Carbon / graphite (sample piece) | 1 | M440.01 |
| Ceramic (sample piece) | 1 | M440.01 |
| Fibreglass (sample piece) | 1 | M440.01 |
| Magnesium (sample piece) | 1 | M440.01 |
| Stainless steel (sample piece) | 1 | M440.01 |
| Titanium (sample piece) | 1 | M440.01 |
| Adhesive bandages | 3 | M490.01 |
| Aluminum foil (piece 30 cm x 30 cm) | 1 | M490.01 |
| Antibiotic tablets | 3 | M490.01 |
| Button compass | 1 | M490.01 |
| Candle | 1 | M490.01 |
| Condom | 1 | M490.01 |
| Cordage (length does not matter) | 5 | M490.01 |
| Cotton balls | 5 | M490.01 |
| Emergency blanket | 1 | M490.01 |
| Fish hooks | 5 | M490.01 |
| Fishing line (length does not matter) | 3 | M490.01 |
| Fishing sinkers | 3 | M490.01 |
| Flexible saw | 1 | M490.01 |
| Garbage bag (small) | 1 | M490.01 |
| Hard candies | 6 | M490.01 |
| Hard or flexible plastic or metal container | 1 | M490.01 |
| Mirror (small) | 1 | M490.01 |
| Moleskin (piece 10 cm x 10 cm) | 1 | M490.01 |
| Pain reliever (pills) | 6 | M490.01 |
| Paper (sheet 8.5 cm x 11 cm) | 1 | M490.01 |
| Resealable plastic bags (very small) | 2 | M490.01 |
| Safety pins | 3 | M490.01 |
| Salt (1 ounce) | 1 | M490.01 |
| Sewing needles | 2 | M490.01 |
| Small folding knife | 2 | M490.01 |
| Snare wire (piece 30 cm long) | 1 | M490.01 |
| Thread (roll) | 1 | M490.01 |
| Tweezers | 1 | M490.01 |
| Water purification tablets | 3 | M490.01 |
| Whistle | 1 | M490.01 |
| Waterproof matches (box) | 1 | M490.01, M490.02 |
| Magnifying glass | 1 | M490.01, M490.04 |

| Item | Quantity | PO/EO |
|---|---|---|
| Drip pan | 2 | M490.02 |
| Dual-mantle naphtha lantern | 2 | M490.02 |
| Funnel | 2 | M490.02 |
| Lantern storage carrier | 2 | M490.02 |
| Mantles | 6 | M490.02 |
| Manual for lantern | 1 | M490.02 |
| Manual for stove | 1 | M490.02 |
| Needle-nose pliers | 1 | M490.02 |
| Spill response kit | 1 | M490.02 |
| Two-burner naphtha stove | 2 | M490.02 |
| Fire extinguisher | 1 | M490.02, M490.04 |
| Braided rope (piece 3m) | 30 | M490.03 |
| Knife | 1 | M490.03 |
| Poles (3 metre) | 30 | M490.03 |
| Aluminum can | 30 | M490.04 |
| Battery - 9 volt | 30 | M490.04 |
| Chocolate (solid bar) | 30 | M490.04 |
| Cordage (6mm x 1 metre) | 30 | M490.04 |
| Fire bow and drill | 1 | M490.04 |
| Fire piston | 1 | M490.04 |
| Magnesium fire starter | 30 | M490.04 |
| Rags/small strips of cotton | 30 | M490.04 |
| Shovel | 1 | M490.04 |
| Steel wool (superfine) | 30 | M490.04 |
| GPS receiver with charged batteries | 15 | M490.05 |

THIS PAGE INTENTIONALLY LEFT BLANK

# ANNEX D

# REFERENCES

## Texts Held by Squadron

A-DH-201-000/PT-000 DHH3-2 (2001). *The Canadian Forces Manual of Drill and Ceremonial*. Ottawa, ON: National Defence.

A-CR-CCP-177/PT-001 D Cdts 3. (2001). *Canadian cadet movement*: cadet *marksmanship program reference manual*. Ottawa, ON: Department of National Defence.

A-CR-CCP-263/PT-001 (2000). *From the Ground Up*. Ottawa, ON: Aviation Publishers Co Ltd.

CATO 51-01 Director Cadets 3 (2008). *Air cadet program outline*. Ottawa: DND.

## Additional References Used During Development

PO X01

Citizenship and Immigration Canada. (2012). *Discover Canada: The rights and responsibilities of citizenship*. Retrieved March 26, 2013 from http://www.cic.gc.ca/english/resources/publications/discover/index.asp.

Citizenship and Immigration Canada. (2011). *Host a citizenship ceremony*. Retrieved March 26, 2013 from http://www.cic.gc.ca/english/celebrate/ceremony.asp.

www.elections.ca > teacher > *Canada at the Polls!* (Elections Canada. (2010). *Canada at the Polls!* Retrieved March 13, 2013 from http://elections.ca/content.aspx?section=vot&dir=yth/stu/gui&document=index&lang=e.)

Historica Dominica Institute. (2013). *Canadian citizenship challenge*. Retrieved March 26, 2013 from http://www.citizenshipchallenge.ca/.

Historica Dominion Institute. (2013). *Heritage Minutes Videos*. Retrieved March 13, 2013 from https://www.historica-dominion.ca/content/videos.

PO X02

Kaye, Cathryn B. (2010). *The complete guide to service learning: Proven, practical ways to engage students in civic responsibility, academic curriculum*, & *social action*. Minneapolis, MN: Free Spirit Publishing Inc.

PO 403

*4-H volunteer leaders' series: The enabler–A leadership style*. (2006). Retrieved February 18, 2009, from http://www.uaex.edu/other_areas/publications/PDF/4HCD2.pdf.

*11 Time management tips*. (2006). Retrieved March 30, 2009, from http://sbinfocanada.about.com/cs/timemanagement/a/timemgttips.htm.

A-CR-CCP-910/PT-001 Director Cadets 6 (1989). *Training school leadership*. Ottawa, ON: Department of National Defence.

ISBN 1-58062-513-4 Adams, Bob (2001). *The Everything Leadership Book*. Avon, MA: Adams Media Corporation.

*Brain boosters*. (2006). Retrieved April 15, 2009, from http://school.discoveryeducation.com/brainboosters/.

0-7645-5408-5 Brounstein, M. (2002). *Managing teams for dummies*. Indianapolis, IN: Wiley Publishing, Inc.

0-7894-8006-9 Bruce, A., & Langdon, K. (2001). *Do it now!* New York, NY: DK Publishing, Inc.

ISBN I-57517-344-1 Burke, K. (2000). *What to do with the kid who*..... Arlington Heights: Skylight Professional Development.

Canadian Yachting Association (2003). *Level 2 technical coach manual*. Kingston: Canadian Yachting Association.

ISBN 0-02864-207-4 Cole, Kris (2002). *The complete idiot's guide to clear communication*. Indianapolis, IN: Alpha Books.

Dweck, C. S (2007). *The perils and promises of praise*. Education Leadership (JOURNAL).

ISBN 0-7619-4626-8 Earl, L. M. (2003). *Assessment as learning*. Thousand Oaks: Corwin Press.

*Extrinsic Motivation*. (2006). Retrieved February 26, 2009, from http://giftedkids.about.com/od/glossary/g/extrinsic.htm.

*Follow these six steps when providing constructive performance feedback*. (2006). Retrieved February 5, 2009, from http://articles.techrepublic.com.com/5100-10878_11-6102736.html.

Goodkin, J (2001). *National Outdoor Leadership School (NOLS): Leadership education toolbox*. Lander, WY: NOLS Publishing.

0-7894-4863-7 Heller, R. (1999). *Achieving excellence*. New York, NY: DK Publishing, Inc.

0-7894-3244-7 Heller, R. (1998). *Communicate clearly*. New York, NY: DK Publishing, Inc.

0-7894-4862-9 Heller, R. (1999). *Learning to lead*. New York, NY: DK Publishing, Inc.

ISBN 0-7879-6068-3 Hesselbein, F., & Johnston, R (2002). *A leader to leader guide: On mission and leadership*. San Francisco, CA: Jossey-Bass Publishing.

*Intrinsic Motivation*. (2006). Retrieved February 26, 2009, from http://giftedkids.about.com/od/glossary/g/intrinsic..

ISBN 978-1-879097-10-0 Kagan, S., & Kagan, M. (2009). *Kagan cooperative learning*. San Clemente: Kagan Publishing.

*Leadership & direction*. (2006). Retrieved February 21, 2008, from http://www.nwlink.com/~donclark/leader/leaddir.html.

*Module #5: Defining leadership styles*. (2006). Retrieved February 12, 2009, from http://www.aspira.org/files/documents/youthdev08/U_V_M_5_dls.pdf

*NASA exercise: Survival on the moon*. (2006). Retrieved April 14, 2009, from http://www.shurdington.org/Downloads/NASA%20Exercise.pdf.

978-1-59869-450-5 Nigro, N. (2008). *The everything coaching and mentoring book*. Avon, MA: F+W Publications Company.

Peeling, G (2000). *Feedback techniques: 7 things to know about giving feedback: Trainers Guide*. Cambridgeshire, England: Fenman Limited.

0-02-863656-2 Pell, A.R. (1999). *The complete idiot's guide to team building*. Indianapolis, IN: Alpha Books.

*Preparing a to-do list*. (2006). Retrieved March 30, 2009, from http://www.mindtools.com/pages/article/newHTE_05.htm.

*Problem solving: Do you have the answer?* (2006). Retrieved April 14, 2009, from http://www.pedagonet.com/brain/brainers.html.

ISBN 0-7879-6294-5 Rhodes, J (2002). *New directions for youth development: A critical view of youth mentoring*. New York, NY: Jossey-Bass Publishing.

0-14-024272-4 Rosen, R. H., & Brown, P. B. (1997). *Leading people*. New York, NY: Penguin Books.

*Simple Prioritization*. (2006). Retrieved March 30, 2009, from http://www.mindtools.com/pages/article/newHTE_92.htm.

*Six thinking hats*. (2006). Retrieved April 14, 2009, from http://www.mindtools.com/pages/article/newTED_07.htm.

*Stepladder technique: Making better group decisions*. (2006). Retrieved April 14, 2009, from http://www.mindtools.com/pages/article/newTED_89.htm.

*Supervision of Children*. (2006). Retrieved April 1, 2009, from http://www.pscwa.org.au/documents/DCDGUIOSHCFactSheetSupervisionofChildren.pdf.

Taylor, J. (2003). *Training new mentees: A manual for preparing youth in mentoring programs*. USA: The National Mentoring Center.

*Time management: Manage yourself, not your time*. (2006). Retrieved March 31, 2009, from http://www.tsuccess.dircon.co.uk/timemanagementtips.htm.

*Time management tips for high school students*. (2006). Retrieved March 31, 2009, from http://www.collegeboard.com/student/plan,college-success/116.html.

ISBN 978-0-87425-495-2 Tulgan, B (1999). *Fast feedback* (2nd ed). Amherst, MA: HRD Press, Inc.

0-7879-4059-3 VanLinden & Ferthan (1998). *Youth Leadership*. San Francisco, CA: Jeossey-Bass Inc. Publisher.

*Why do we procrastinate*. (2006). Retrieved March 30, 2009, from http://www.mindtools.com/pages/article/newHTE_96.htm.

PO X04

Canadian Society for Exercise Physiology. (2011). *Guidelines*. Retrieved May 1, 2011, from http://www.csep.ca

CATO 14-18 Director Cadets 3. (2010). *Cadet fitness assessment and incentive program*. Ottawa, ON: Department of National Defence.

The Cooper Institute. (n.d.). *Fitnessgram / activitygram test administration kit: Fitnessgram 8.0 stand-alone test kit*. Windsor, ON: Human Kinetics.

ISBN 0-662-44467-1 Health Canada. (2007). *Canada's food guide*. Ottawa, ON: Her Majesty the Queen in Right of Canada.

Health Canada. (2011). *Eat Well and Be Active Education Toolkit*. Retrieved September 29, 2011, from http://hc-sc.gc.ca/fn-an/food-guide-aliment/educ-comm/toolkit-trousse/plan-3a-eng.php

Health Canada. (2011). *Physical activity*. Retrieved May 1, 2011 from http://www.phac-aspc.gc.ca/hp-ps/hl-mvs/pa-ap/index-eng.php

Meredith, M., & Welk, G. (Eds.). (2005). *Fitnessgram / activitygram: Test administration manual* (3rd ed.). Windsor, ON: Human Kinetics.

Panicucci, J. (2008). *Achieving Fitness: An Adventure Activity Guide*. Beverly, MA: Project Adventure, Inc

ParticipACTION. (2011). *Get moving*. Retrieved November 28, 2011 from www.participaction.com/en-us/Get-Moving/Easy-Ways-To-Start.aspx

ISBN 978-0-316-11350-2 Ratey, J. MD. (2008). *Spark: The revolutionary new science of exercise and the brain*. New York, NY: Little, Brown and Company.

PO X05

A-CR-CCP-150/PT-001 Chapman, J.R. Major, M.B.E. (1968). *Orienteering: An Aid to Training*. London, England: Hillside Printing & Publishing Co.

A-CR-CCP-151/PT-001 Canadian Orienteering Federation (1983). *Orienteering Level 1 Coaching Certification*. Ottawa, ON: Canadian Orienteering Federation.

A-PD-050-015/PT-002 Directorate of Physical Education, Recreation and Amenities. (1989). *Physical fitness training in the Canadian Forces* (Vol. 2). Ottawa, ON: Department of National Defence.

*About Ultimate*. (2006). Retrieved 27 April 2006, from www.upa.org/ultimate

ISBN 0-936070-22-6 Anderson, B. (2000). *Stretching: 20th anniversary* (Rev. ed.). Bolinas, CA: Shelter Publications, Inc.

0-3955-2808-9 Alter, J (1986). *Stretch and strengthen*. US: Judith Alter.

Body Bar. (2010). *Programs & education*. Retrieved October 5, 2011, from http://www.bodybar.com/Programs-Education

Canadian Orienteering Federation (1985). *Orienteering Level Two Coaching Certification*. Ottawa, ON: Canadian Orienteering Federation.

City of Saskatoon, Community Services Department. (2006). *Stretch your limits: A smart guide to stretching for fitness*. Retrieved October 26, 2006, from http://www.in-motion.ca/walkingworkout/plan/flexibility/

0-7360-4602-X Clark, N (2003). *Nancy Clark's sports nutrition guidebook*. US: Nancy Clark.

ISBN 978-0-7360-6675-4 Corbin, C., & Lindsey, R. (2007). *Fitness for life: Updated fifth edition*. Windsor, ON: Human Kinetics.

ISBN 0-88011-807-5 Hanlon, Thomas (1998). *The Sports Rules Book: Essential Rules for 54 Sports*. USA: Human Kinetics Publishers.

The HealthCentral Network. (2007). *MyDietExcercise.com: Winds sprint your way to fitness*. Retrieved April 17, 2007, from http://www.healthcentral.com/diet-exercise/fitness-survival-guides-81076-137.html

Hansen, B. (1999). *Moving on the spot: Fun and physical activity: A collection of 5 minute stretch and movement sessions*. Retrieved October 26, 2006, from http://lin.ca/resource/html/dn3.htm#l1

ISBN 0-02-029265-1 Kjellstrom, Bjorn (1994). *Be Expert With Map & Compass: The Complete Orienteering Handbook*. New York, NY: Hungry Minds, Inc.

ISBN 0-88962-630-8 LeBlanc, Janet and Dickson, Louise (1997). *Straight Talk about Children and Sport: Advice for Parents, Coaches, and Teachers*. Oakville, ON and Buffalo, NY: Mosaic Press.

Livestrong.com. (2011). *Beginner's Pilates exercises*. Retrieved October 4, 2011, from http:// www.livestrong.com/article/452265-beginner-pilates-exercises/

Men's Health. (2011). *The 5-minute six-pack abs*. Retrieved October 5, 2011, from http:// www.menshealth.com.sg/fitness/5-minute-six-pack-abs

ISBN 0-88011-463-0 Nideffer, R. PhD. (1992). *Psyched to win: How to master mental skills to improve your physical performance*. Champaign, IL: Leisure Press.

Norris, G. (Ed.). (1998). *National Football Federation: Touch football rule book 2004*. Ottawa, ON: National Football Federation.

*Orienteering*. (2006). Retrieved 25 May 2006, from www.orienteering.org

ISBN 0-934387-29-X Panicucci, J. (2008). *Achieving Fitness: An Adventure Activity Guide*. Beverly, MA: Project Adventure, Inc.

Popovic, Srdjan. (2011). *10 Skipping Rope Exercises for a Better Body*. Retrieved October 6, 2011, from http://www.bloomtofit.com/10-skipping-rope-exercises-for-a-better-body

*Ringette Canada*. (2006). Retrieved 27 April 2006, from www.ringette.ca

*Roadcycling.com - Cycling info as it should be*. (2006). Retrieved 25 April 2006, from www.roadcycling.com

*Shelter Online*. (2006). Retrieved 25 April 2006, from www.shelterpub.com

Sports fitness advisor. (n.d.). *Medicine ball exercises*. Retrieved October 5, 2011, from http://www.sport-fitness-advisor.com/medicine-ball-exercises.html

Stott, Winifred (1987). *Armchair Orienteering II: A Practical Guide to Route Planning*. Winnipeg, MB: Manitoba Orienteering Association.

Waehner, P. (n.d.). *Resistance band workout for beginners*. Retrieved October 5, 2011 from http://exercise.about.com/library/bltotalresistancebeginners.htm

*A Walking Club - Walkablock Club of America*. (2006). Retrieved 25 April 2006, from www.walkablock.com

*What is Ultimate Frisbee?* (2006). Retrieved 27 April 2006, from www.whatisultimate.com

PO 406

CATO 14-41 Director Cadets 4. (2007). Marksmanship, *rifles, and ammunitions*. Ottawa, ON: Department of National Defence.

PO 407

*Air cadets national summer training courses: Selection process*. (2006). Retrieved February 6, 2009, from http://www.aircadetleague.com.

CATO 11-03 D Cdts (2006). *Cadet program mandate*. Ottawa, ON: Department of National Defence.

CATO 13-02 Director Cadets 3. (2009). *Cadet rank promotions*. Ottawa, ON: Department of National Defence.

CATO 14-21 D Cdts (2004). *Music training and education with the Canadian cadet organizations*. Ottawa, ON: Department of National Defence.

CATO 51-01 Director Cadets 3. (2011). *Air cadet program outline*. Ottawa, ON: Department of National Defence.

CATO 54-26 Director Cadets 4. (2007). *Glider Pilot Scholarship Program*. Ottawa, ON: Department of National Defence.

CATO 54-27 Director Cadets 4. (2007). *Power pilot scholarship program*. Ottawa: ON: Department of National Defence.

CATO 55-04 Cadets Canada (2005). *Air Cadet Dress Instructions*. Ottawa, ON: Department of National Defence.

*Sponsoring committee resources: Mock boards*. (2006). Retrieved March 4, 2009, from http://www.aircadetleague.bc.ca/SponCommResources/Mock_Boards..

QR&O 3.01 Canadian Forces (2006). *Queen's regulations & orders for the Canadian Forces 3.01*. Ottawa, ON: Department of National Defence.

PO 409

A-P9-050-000/PT-006 Director Training and Education Policy (2002). Canadian Forces manual of individual training and education (Vol.6). Ottawa, ON: Department of National Defence.

A-PD-050-001-PF-001 Chief of Defence Staff (2001). *Central flying school flight instructors handbook*. Winnipeg: Department of National Defence.

*Approaches to creativity*. (2006). Retrieved March 16, 2009, from http://www.mindtools.com/pages/article/newCT_00.htm.

*Being more creative in everyday life is simple, says author of 'Group Genius'*. (2006). Retrieved March 10, 2009, from http://news-innfo.wustl.edu/tips/page/normal/9421.html.

*Classroom management plan*. (2006). Retrieved February 27, 2009, from http://www.katiehandy.wordpress.com/classroom-management-plan/.

*Creating the ideal learning environment - Emotional*. (2006). Retrieved February 25, 2009, from http://ezinearticles.com/?Creating-the-Ideal-Learning-Environment---Emotional&id=1536435.

*Creating a learning centered environment - Introduction*. (2006). Retrieved February 23, 2009, from http://www.dialogueonlearning.tc3.edu/model/environment/Introduction-grp.htm.

Director Cadets 3 (2007). *Youth reference guide*. Ottawa: Department of National Defence.

*Education Information for new and future teachers*. (2006). Retrieved February 26, 2009, from www.adprima.com.

*How to involve and engage students*. (2006). Retrieved March 4, 2009, from http://www.education-world.com/a_curr/columnists/mcdonald/mcdonald007.shtml.

*How to think like a genius*. (2006). Retrieved March 9, 2009, from http://www.creativity-portal.com/howto/a/davinci/genius.html.

*Integrating creativity into online university courses*. (2006). Retrieved February 11, 2009, from http://ifets.ieee.org/discussions/discuss_september2006.html.

*Stickiness: Skills retention and synthesis*. (2006). Retrieved March 23, 2009, from http://www.airs.org/files/public/Making_Training_Stick.pdf.

Thomas Edison "Quotes". (2006). Retrieved March 9, 2009, from http://www.thomasedison.com/index.html.

*Quiet signals for getting attention and control of your classroom*. (2006). Retrieved February 27, 2009, from http://www.teachercreated.com/blog/?tag=attention-signals.

PO X20

A-AD-200-000/AG-000 Director Honours and Recognition. (1999). *The honours, flags and heritage structure of Canadian Forces*. Ottawa, ON: Department of National Defence.

A-AD-262-000/AG-000 Director of Physical Education, Recreation and Amenities. (1984). *Mess administration*. Ottawa, ON: Department of National Defence.

A-CR-050-801/PH-001 Directorate of Cadets 6. (2009). *Training plan DP1 Cadet Instructors Cadre: Basic Officer Training Course*. Ottawa, ON: Department of National Defence.

B-GL-317-018/PT-001 Canadian Forces. (1987). *Weapons: The rifle 5.56 mm C7 and the carbine 5.56 mm C8* (Vol. 18). Ottawa, ON: Department of National Defence.

CFACM 1-900 Air Command. (2007). *Air command mess dinner procedures*. Ottawa, ON: Department of National Defence.

DVD Video Chadderton, H. C. (Producer) (2005). *The Boys of Kelvin High: Canadians in Bomber Command*. Ontario: The War Amps of Canada.

DVD Video Chadderton, H. C. (Producer) (2000). *A War Of Their Own: The Canadians in Sicily and Italy*. Ontario: The War Amps of Canada.

DVD Video (2010). *The International Fleet Reviews of The Canadian Navy Centennial 2010*. Canada: Department of National Defence.

DVD Video Gimblett, R. H. (Author) (2004). *Operation Apollo: The Canadian Navy in the War Against Terrorism – 2001-2003*. Canada: Magic Light Publishing.

DVD Video Guilmain, C. (Director) (2012). *The Van Doos in Afghanistan*. National Film Board of Canada.

HMCS Queen Regina's Naval Reserve Division. (2009). *Chief Petty Officers & Petty Officers mess dinner naval customs*. Retrieved April 28, 2009, from http://www.hmcsqueen.ca/cpomessdinner.pdf.

Love, D.W. (1990). *Manual of Canadian naval etiquette*. Victoria, BC: VENTURE, The Naval Officer Training Centre.

ReadyAyeReady (2009). *Naval Toasts of the Day – Customs and Traditions: Naval toasts of the day*. Retrieved April 1, 2009 from http://www.readyayeready.com/tradition/naval-toasts-of-theday.htm.

PO 429

*Guide for the Radiotelephone Operator's Restricted Certificate (Aeronautical)*. (2006). Retrieved October 23, 2007, from www.ic.gc.ca/epic/site/smt-gst.nsf/en/sf01397e.html.

PO 431

*Computerized Aircraft Simulation Center*. (2006). Retrieved October 2, 2007, from http:// www.regions.cadets.forces.gc.ca/pac/aircad/flight/ casc_lessons_e.asp.

*Model Aeronautics Association of Canada Safety Code*. (2006). Retrieved February 5, 2009, from http:// www.maac.ca/docs/2007/maac_safety_code_v008sept30_08_english.

0-7715511-5-0 Transport Canada (1999). *Flight training manual 4th edition revised*. Ottawa: Transport Canada.

PO 436

CFACM 2-700 Air Command (2001). *Air Command weather manual*. Ottawa ON: Department of National Defence.

*Cloud in a bottle*. (2006). Retrieved October 30, 2007, from http://www.weatherwizkids.com/cloud1.htm.

*Remote Sensing Tutorial*. Federation of American Scientists. (2006). Retrieved February 26, 2009, from http:// www.fas.org/irp/imint/docs/rst/Sect14/Sect14_1c.html.

PO 440

*Alouette I and II*. (2006). Retrieved September 29, 2008, from http://www.space.gc.ca/asc/eng/satellites/alouette.asp.

Bartel, N. (Producer & Director). (2003). *Testing Einstein's universe* [Motion picture]. Canada: York University.

*BLAST (Balloon-Borne Large Aperture Sub-Millimetre Telescope)*. (2006). Retrieved January 30, 2009, from http://blastexperiment.info/.

*Canada centre for remote sensing: Radarsat*. (2006). Retrieved September 29, 2008, from http://www.ccrs.nrcan.gc.ca/radar/spaceborne/radarsat1/index_e.php.

11073-INST Celestron (2006). *CPC series instructional manual*. Torrance, CA: Celestron.

Devlin, P (Producer & Director). (2008). *BLAST!* [Motion picture]. United States: The ArtistShare Project.

1-55209-302-6 Dickenson, T. (2001). *Night watch*. Willowdale, ON: Firefly Books.

*Explore the night sky*. (2006). Retrieved December 3, 2007, from http://www.nrc-cnrc.gc.ca/eng/education/astronomy/constellations/html.html.

*Exploring the moon: A teacher's guide with activities*. (2006). Retrieved September 30, 2008, from http://lunar.arc.nasa.gov/education/pdf/expmoon.pdf.

*Gravity Probe B: Testing Einstein's universe*. (2006). Retrieved February 6, 2009, from http://einstein.stanford.edu/index.html.

*How forces act on structures*. (2006). Retrieved February 19, 2009, from http://resources.yesican-science.ca/sts115/aboutforces.html.

Johnstone, G. (Producer & Director) (2005). *Einstein's big idea* [Motion picture]. United States: WBGH Educational Foundation.

*A learning guide for model rocket launch systems*. (2006). Retrieved 1999, from http://www.estesrockets.com/assets/downloads/launchsystemguide.pdf.

*Model rocketry technical manual*. (2006). Retrieved 1993, from http://www.estesrockets.com/assets/downloads/roecketrytechniques.pdf.

1055407-071-6 Moore, P. (2005). *Atlas of the universe*. Richmond Hill: Firefly Books.

*MOST: Canada's first space telescope*. (2006). Retrieved September 29, 2008, from http://www.astro.ubc.ca/MOST/overview.html#glance.

*Orbital mechanics: Energy*. (2006). Retrieved September 30, 2008, from http://www.space.gc.ca/eng/educators/resources/orbital/energy.asp.

*Planetary fact sheet – metric*. (2006). Retrieved October 14, 2008, from http://nssdc.gsfc.nasa.gov/planetary/factsheet/index.html.

*Planetary fact sheet – ratio to earth values*. (2006). Retrieved October 14, 2008, from http://nssdc.gsfc.nasa.gov/planetary/factsheet/planet_table_ratio.html.

1-55297-853-2 (2004). *Planisphere, shows the position of the stars for every night of the year*. Willowdale, ON: Firefly Books.

Range, S. K (2004). *Gravity Probe B: An educator's guide*. Washington, DC: NASA.

*Rover ranch: K-12 experiments in robotic software*. (2006). Retrieved November 20, 2008, from http://prime.jsc.nasa.gov/ROV/.

ISBN 978-0-471-47242-1 Stine, G. H. (2004). *Handbook of model rocketry*. Toronto, ON: John Wiley & Sons.

*Teacher's guide: Einstein's big idea*. (2006). Retrieved January 30, 2009, from http://www.pbs.org/wgbh/nova/einstein/.

*Thousand-yard model: or, the Earth as a peppercorn*. (2006). Retrieved 1998, from http://www.noao.edu/education/peppercorn/pcmain.html.

PO 460

*Aviation career overviews*. (2006). Retrieved February 9, 2009, from http://www.avjobs.com/careers/index.asp.

*Employment opportunities*. (2006). Retrieved February 10, 2009, from http://www.catsa-acsta.gc.ca/english/about_propos/opp/index.cfm.

*Post secondary programs*. (2006). Retrieved February 9, 2009, from http://www.cacairports.ca/english/careers/post_secondary_programs.php.

*Screening officers – Roles and responsibilities*. (2006). Retrieved February 10, 2009, from from http://www.catsa-acsta.gc.ca/so-ac/english/roles/.

*Take charge of your career*. (2006). Retrieved February 23, 2009, from http://takecharge.navcanda.ca.

PO 470

*Aerospace in Canada*. (2006). Retrieved February 10, 2009, from http://www.ic.gc.ca/eic/site/ad-ad.nsf/eng/ad03909.html.

ISBN 978-2-921393-91-1 Bombardier Inc (2009). *Canada's Bombardier*. Canada: Bombardier Inc.

*Canada's aerospace advantages*. (2006). Retrieved February 10, 2009, from http://investincanada.gc.ca/eng/industry-sectors/advanced-manufacturing/aerospace/aerospace-advantages.aspx.

ISBN 0-88487-205-1 Sanderson Training Systems (2001). *A&P technician airframe textbook*. Englewood, CO: Jeppesen Sanderson Inc.

ISBN 0-88487-203-3 Sanderson Training Systems (2000). *A&P technician general textbook*. Englewood, CO: Jeppesen Sanderson Inc.

*Unmanned aerial vehicles*. (2006). Retrieved February 10, 2009, from http://www.thirtythousandfeet.com/uav.htm.

DVD (n.d.). *World's Biggest Airlines. The Air Bus A380 - Coming Together*. United States: The Learning Channel.

PO 490

A-MD-050-072/PW-001 Canadian Forces (2006). *Military first aid: Safety oriented: basic and standard Levels: Activity book*. Ottawa, ON: Department of National Defence.

B-GG-217-001/PT-001 DAD (1983). *Down but not out*. Ottawa, ON: Canadian Forces.

B-GG-302-002/FP-001 Canadian Forces (1974). Arctic and sub-arctic operations: Part 1. Ottawa: Department of National Defence.

*Canadian regional climate*. (2006). Retrieved April 16, 2009, from http://www.ocanada.ca/climate/regional.php.

CF. *Prepare for takeoff as a pilot* (DVD). Ottawa: CFRG Multimedia Services.

1-85227-866-8 Davies, B (1999). *SAS encylcopedia of survival*. Virgin Publications.

13: 978-0-8117-3292-5 Davenport, G (2006). *Wilderness Survival*. Mechanicsburg, PA: Stackpole Books.

*Environmental impacts*. (2006). Retrieved April 16, 2009, from http://www.ec.gc.ca/cc/default.asp?lang=En&n=4630D154-1.

*Fire from a can of coke and a chocolate bar*. (2006). Retrieved February 9, 2009, from http://www.wildwoodsurvival.com/survival/fire/cokeandchocolatebar/index.html.

*The fire piston: Ancient firemaking machine*. (2006). Retrieved February 9, 2009, from http://www.primitiveways.com/fire_piston.html.

*Four seasons*. (2006). Retrieved April 22, 2009, from http://www.goingtocanada.gc.ca/CIC/display-afficher.do?id=0000000000039&lang=eng.

*GPS tutorial*. (2006). Retrieved February 10, 2008, from http://www.trimble.com/gps/index.shtml.

*Health impacts*. (2006). Retrieved April 16, 2009, from http://www.ec.gc.ca/cc/default.asp?lang=En&n=0B072979-.

0-7637-4807-2 NASAR (2005). *Fundamentals of Search and Rescue*. Mississauga, ON: Jones and Bartlett Publishers.

1-55267-218-2 Pawson, D (2001). *Pocket guide to knots and splices*. London: PRC Publishing.

1-896713-00-9 Tawrell, P (2002). *Camping and wilderness survival: The ultimate outdoors book*. Green Valley, ON: Tawrell.

*USNO GPS timing operations*. (2006). Retrieved February 10, 2008, from http://tycho.usno.navy.mil/gps.html.

# CHAPTER 3
# CADET EVALUATION

## PURPOSE

1. This chapter outlines the evaluation requirements for achievement of Proficiency Level Four qualification.

## LEARNER EVALUATION

2. During Proficiency Level Four, a combination of formative and summative evaluation will be used to track cadets' progress.

3. Formative evaluation, or assessment **for** learning, takes place during a phase of instruction and helps cadets and instructors recognize cadets' progress or difficulties in learning. Through formative evaluation, the instructor can: identify when corrective or remedial action is required, plan the next steps in instruction, provide cadets with feedback so they can improve, and reinforce learning to aid the cadet in retaining information. Formative evaluation may also include opportunities for cadets to practice using Performance Checks (PCs) employed in summative evaluation.

4. Summative evaluation, or assessment **of** learning, takes place to determine whether learners have achieved POs or critical EOs (those deemed prerequisites to further individual training and education) and is used at the end of a phase of instruction. Details for assessment of learning are located within this chapter.

## CADET EVALUATION DESIGN AND DEVELOPMENT

5. Cadet evaluation is designed and developed incorporating contemporary professional practices from the fields of education and youth development as well as considering best practices in use within the Canadian Cadet Organizations (CCO).

6. Cadet evaluation is designed and developed so that all cadets are capable of achieving all POs and associated EOs. To motivate cadets to learn, cadet evaluation builds on success and confidence rather than demotivating cadets with failure and defeat.

7. The following fundamental assessment principles shall guide the conduct of Proficiency Level Four assessment activities:

   a. in advance of training, the instructor shall inform the cadet of POs and EOs associated with the qualification;

   b. in advance of training, the instructor shall inform the cadet of the assessment plan for the qualification and provide the cadet with an opportunity to review the applicable forms used in assessment;

   c. assessment information shall be shared between the instructor and the cadet and used to revise and guide instruction and learning;

   d. the instructor shall provide feedback that is descriptive, constructive, frequent, and timely; helping the cadet to identify strengths and address areas requiring improvement;

   e. the cadet shall be actively, consistently and effectively involved in assessment; including learning to manage their own learning through the skills of self-assessment; and

   f. the cadet shall be encouraged to actively, consistently and effectively communicate with others about their learning progress.

**CP DEVELOPMENTAL PERIODS (DPs)**

8. The CP is designed across adolescent DPs adapted to suit the CP target population. Outlined in each DP are specific philosophies and approaches to learning and assessment that influence design, development and conduct of cadet training and assessment.

9. A DP is a time frame, during a cadet's progression through the CP, in which the cadet participates in training and is provided opportunities to develop desired knowledge, skills and attitudes that support the aims of the CP and contribute to the achievement of the CP outcomes.

10. Progressive training levels, and associated learning objectives, distinguish each DP; ensuring training is relevant, achievable and age-appropriate for the cadet population. DPs and associated training levels are designed to be completed in a sequential manner and are also fluid, which allows a cadet to progress to the next training level or DP while still working on completion of learning objectives from the previous level or DP.

11. The design and development of cadet training and evaluation is based on the basic overview of the DP characteristics located at Chapter 3, Annex A.

**CADET ASSESSMENT OF LEARNING PLAN**

12. The Assessment of Learning Plan located at Chapter 3, Annex B, provides an overall strategy for using assessment activities to determine if the cadet meets the requirements for Proficiency Level Four qualification. The assessment of learning plan will:

a. provide an outline of each assessment of learning activity including its purpose, when it will occur, and details the assessment instrument(s) used to support cadet evaluation;

b. identify the learning target(s) associated with the PO and / or EO being assessed, to include:

(1) **Knowledge Mastery.** The facts, concepts and theory a cadet needs to know;

(2) **Reasoning Proficiency.** A cadet uses what they know to solve a problem, make a decision, make a plan, think critically, set goals, or self-assess;

(3) **Skills.** Performance demonstration; where the cadet demonstrates their ability to perform a skill. To be assessed, these performances must be demonstrated by the cadet and observed by an assessor;

(4) **Ability to Create Products.** A cadet uses their knowledge, reasoning and skills to create a concrete product; and / or

(5) **Attitudinal / Dispositional Changes.** A cadet's attitude about learning, safety, conducts, etc. Targets in this realm reflect attitude and feeling. They represent important affective goals we hold for a cadet as a by-product of their CP experience, and as such are not generally assessed for the purpose of attaining a qualification.

c. identify the assessment method(s) that best matches PO and / or EO learning targets, to include:

(1) **Selected Response.** A cadet selects the correct or best response from a list provided. Formats include multiple choice, true / false, matching, short answer, and fill-in questions. Although short answer and fill-in-the-blank questions do require cadets to generate an answer, they call for a very brief answer that is counted as right or wrong, so these have been included in the selected response category;

(2) **Extended Written Response.** A cadet is required to construct a written answer in response to a question or task rather than select one from a list. An extended written response is one that is at least several sentences in length;

(3) **Performance Assessment.** This assessment method is based on observation and judgment; the performance or product is observed and determination is made as to its quality; and / or

(4) **Personal Communication.** Gathering information about a cadet through personal communication, learning is assessed through interpersonal interaction with the cadet.

**ASSESSMENT INSTRUMENTS**

13. Specific assessment instruments have been designed to support each assessment activity within the assessment of learning plan. These are meant to standardize assessment activities and cadet evaluation for all cadets attempting the qualification. Assessment instruments are located at Chapter 3, Annex B.

**MONITORING CADET PROGRESS**

14. Cadets must meet the standard of behaviour and conduct expected from all cadets. During cadet interviews and personal counselling, the Proficiency Level Four Course Officer should adopt a proactive approach towards difficulties.

15. The Proficiency Level Four Course Officer should meet formally and informally with cadets throughout the training year to discuss the cadet's progress towards Proficiency Level Four qualification (assessment for learning) and to provide feedback on overall performance. The Proficiency Level Four Course Officer shall meet with each cadet at the end of the training year to review the completed *Proficiency Level Four Qualification Record*. Guidelines for conducting cadet interviews are located at Chapter 3, Annex D.

16. Frequent absences from mandatory and complementary training that could result in the cadet not meeting the minimum standard for Proficiency Level Four qualification must be addressed in accordance with CATO 15-22, *Conduct and Discipline – Cadets*.

**TRAINING COUNSELLING SESSION**

17. A training counselling session is used when a cadet is having difficulties progressing and an intervention is required to set goals for corrective action and / or remedial instruction. The Trg O is responsible for conducting training counselling sessions, except in the case of cadet rank promotions for which the CO is responsible. Guidelines for conducting training counselling sessions are located at Annex E and the Training Counselling Session Form is located at Annex E, Appendix 1.

**ADDITIONAL ASSESSMENT OF LEARNING ACTIVITIES**

18. No additional cadet evaluations, eg, theory tests or performance checks, are to be used to determine Proficiency Level Four qualification eligibility. Therefore, these national standards are not to be supplemented with additional regional and / or local standards.

**PROFICIENCY LEVEL FOUR QUALIFICATION STANDARD**

19. The minimum standard for Proficiency Level Four qualification is:

a. 60 percent overall attendance in all scheduled mandatory and complementary training as calculated by the squadron; and

b. successful completion of each PO as outlined in the Proficiency Level Four Qualification Record located at Chapter 3, Annex C.

## CADETS NOT MEETING THE QUALIFICATION STANDARD

20. A cadet who does not meet the qualification standard for any PO shall be given a reasonable opportunity to achieve the standard. Unless otherwise specified in the assessment of learning plan and associated assessment instruments, there is no limit to the number of additional opportunities that may be afforded to the cadet, provided it is within the resources of the squadron. If, by the end of the training year, a cadet who is Proficiency Level Three qualified has not successfully attained any PO, the squadron CO may waive the minimum qualification standard. When waiving any PO requirement, the squadron CO shall consider:

a. the legitimacy of the cadet's reason for failing to attain the PO;

b. the cadet's mandatory and complementary training attendance; and

c. the cadet's overall behaviour and performance.

21. Any cadet for whom a waiver has been issued will not be granted the Proficiency Level Four qualification. However, that cadet will progress to Proficiency Level Five in the fifth year of their squadron membership. If a CO does not grant a cadet a waiver, that cadet may be held back to repeat Proficiency Level Four.

22. Cadets who have been granted a waiver of the qualification standard of Proficiency Level Four and have progressed to Proficiency Level Five in the fifth year of their squadron membership are expected to achieve the missing Proficiency Level Four PO requirements. To facilitate this, cadets may concurrently receive credit for activities completed in Proficiency Level Five as part of also achieving Proficiency Level Four.

23. Only cadets who have achieved Proficiency Level Three qualification may be granted a waiver.

## RECORDING AND REPORTING CADET ACHIEVEMENT

24. The progress of each cadet shall be recorded on the Proficiency Level Four Qualification Record, located at Chapter 3, Annex C, which is also used to determine successful completion of Proficiency Level Four qualification. COs are responsible for ensuring the results are recorded on each cadet's DND 2399, *Cadet Personnel Record*.

## PROFICIENCY LEVEL FOUR CERTIFICATE OF QUALIFICATION

25. The CF 558, *Cadet Certificate of Qualification* (NSN 7530-21-870-7685), shall be awarded to each cadet upon successful completion of the Proficiency Level Four qualification.

# ANNEX A

## CHARACTERISTICS OF CADET PROGRAM DEVELOPMENTAL PERIODS

| Developmental Period (DP) | Developmental Period 1 (DP1) | | Developmental Period 2 (DP2) | | Developmental Period 3 (DP3) |
|---|---|---|---|---|---|
| **Ages** | **12 - 14** | | **15 - 16** | | **17 - 18** |
| **Years** | **Y1** | **Y2** | **Y3** | **Y4** | **Y5+** |
| **DP Overview** | *Learning in the CP is designed around three progressive, DPs. The mental, physical, emotional, and social development of a cadet are considered in these age-appropriate DPs. The cadet develops and ultimately refines higher-level thinking skills (reasoning, reflective thinking, problem solving) as they progress through each DP.* | | | | |
| **Age-Appropriate Learning** | **Experience-based** | | **Developmental** | | **Competency** |
| **DP Description** | *The cadet has well-developed automatic responses however, the area of the brain that processes higher-level thinking is not yet mature. Effective learning is active and interactive with lots of practical experiences.* | | *The cadet starts developing higher-level thinking skills such as problem-solving skills. Effective learning is interactive and practical, allowing cadets to start making decisions within their learning process.* | | *The cadet is refining higher level thinking skills. Effective learning is interactive and allows for increased individual responsibility and independent learning.* |
| **Assessment Expectation** | **Participatory** | | **Baseline Proficiency** | | **Enhanced Proficiency** |
| **Assessment Purpose** | • Stimulation and maintenance of an enhanced interest in the CP<br>NOTE: Exposing the cadet to a variety of training activities and learning opportunities with the assessment expectation focused on participation will help accomplish this.<br>• Exposure to a broad knowledge base and skill set<br>NOTE: CSTC Summer 2 courses will begin to expose the cadet to some specific specialty areas, which will allow the cadet to discover possible areas of particular interest. | | • Development of a broad knowledge base and skill set as well as introducing reasoning proficiency<br>• Ongoing determination and development of specific specialty areas of interest and capability<br>• Recognition of enhanced proficiency achievement<br>• Ongoing stimulation and maintenance of an enhanced interest in the CP | | • Development of an enhanced knowledge, reasoning or skill proficiency in a targeted specialty area – related to interest, capability and CP requirements<br>• Ongoing development of the broad knowledge base and skill set as well as reasoning proficiency<br>• Ongoing recognition of enhanced proficiency achievement<br>• Ongoing stimulation and maintenance of an enhanced interest in the CP |

THIS PAGE INTENTIONALLY LEFT BLANK

# ANNEX B

## ASSESSMENT OF LEARNING PLAN – PROFICIENCY LEVEL FOUR

| EC / PC | Scope | Purpose | Target | Method | How | When | Resources | Limitations |
|---|---|---|---|---|---|---|---|---|
| ***PO 401 – Participate in Citizenship Activities*** | | | | | | | | |
| X01 PC | PO X01 | To have the cadet participate in a citizenship activity. | Nil. | Nil. | The cadet is observed participating in a minimum of one citizenship activity. | Anytime. | Nil. | Nil. |
| ***PO 402 – Perform Community Service*** | | | | | | | | |
| X02 PC | PO X02 | To have the cadet participate in community service. | Nil. | Nil. | The cadet is observed participating in a minimum of one community service activity. | Anytime. | Nil. | Nil. |
| ***PO 403 – Act as a Team Leader*** | | | | | | | | |
| 403 PC 01 | PO 403 | To assess the cadet's ability to act as a team leader during a leadership assignment. | Reasoning Proficiency and Skills | Performance Assessment and Personal Communication | The cadet is observed acting as a team leader during a leadership assignment. | Ongoing throughout the training year. | Chapter 3, Annex B, Appendix 1 leadership assignment checklist and rubric. | Nil. |
| 403 PC 02 | PO 403 | To assess the cadet's ability to perform a leadership appointment, to include leading and mentoring a team of cadets over time. | Reasoning Proficiency and Skills | Performance Assessment and Personal Communication | The cadet is observed performing a leadership appointment, to include leading and mentoring a team of cadets over time. | Ongoing throughout the training year. | Chapter 3, Annex B, Appendix 1 leadership appointment checklist and rubric. | Nil. |
| ***PO X04 – Track Participation in Physical Activities*** | | | | | | | | |
| 404 PC | PO X04 | To assess the cadet's participation in regular physical activity. | Reasoning Proficiency and Skills | Performance Assessment | The cadet's physical activity tracker is reviewed. | During EO MX04.02. | Chapter 3, Annex B, Appendix 2 and Physical Activity Tracker. | Nil. |

| EC / PC | Scope | Purpose | Target | Method | How | When | Resources | Limitations |
|---|---|---|---|---|---|---|---|---|
| ***PO X05 – Participate in Physical Activities*** | | | | | | | | |
| X05 PC | PO X05 | To have the cadet participate in physical activity. | Nil. | Nil. | The cadet is observed participating in a minimum of one physical activity. | Anytime. | Nil. | Nil. |
| ***PO 406 – Fire the Cadet Air Rifle During Recreational Marksmanship*** | | | | | | | | |
| 406 PC | PO 406 | To have the cadet participate recreational marksmanship. | Nil. | Nil. | The cadet is observed participating in a minimum of one recreational marksmanship activity. | Anytime. | Nil. | Nil. |
| ***PO 407 – Serve in an Air Cadet Squadron*** | | | | | | | | |
| 407 PC | PO 407 | To have the cadet participate in Proficiency Level Four training. | Nil. | Nil. | The cadet is observed participating in a minimum of 60% of mandatory / complementary training. | Anytime. | Nil. | Nil. |
| ***PO 408 – Command a Flight on Parade*** | | | | | | | | |
| 408 PC | PO 408 | To assess the cadet's ability to command a flight on parade. | Skills | Performance Assessment | The cadet is observed as they command a flight on parade by: identifying parade sequence and inspecting a cadet on parade. | During squadron parades. | Chapter 3, Annex B, Appendix 3 checklist. | Assistance is denied. |
| ***PO 409 – Instruct a Lesson*** | | | | | | | | |
| 409 PC | PO 409 | To assess the cadet's ability to prepare and instruct a 30-minute lesson. | Reasoning proficiency and skills | Performance Assessment | The cadet's lesson plan is reviewed and they are observed while instructing a 30-minute lesson. | Ongoing during the conduct of lessons related to EO M409.05 or during any opportunity there after. | Chapter 3, Annex B, Appendix 4. | Assistance is denied. |
| ***PO 311 – Participate in a Recreational Summer Biathlon Activity*** | | | | | | | | |
| Nil. | | | | | | | | |
| ***PO X20 – Participate in CAF Familiarization Activities*** | | | | | | | | |
| X20 PC | PO X20 | To have the cadet participate in CAF familiarization. | Nil. | Nil. | The cadet is observed participating in a minimum of one CAF familiarization activity. | Anytime. | Nil. | Nil. |

| EC / PC | Scope | Purpose | Target | Method | How | When | Resources | Limitations |
|---|---|---|---|---|---|---|---|---|
| ***PO 429 – Communicate Using Radio Procedures for Aviation Transmission*** | | | | | | | | |
| 429 PC (*Note*: The cadet is not required to complete this PO to obtain the Proficiency Level Four qualification.) | PO 429 | To assess the cadets' ability to master knowledge of radio subjects and qualify for the Industry Canada Restricted Operator Certificate With Aeronautical Qualification (ROC-A). | Knowledge Mastery | Selected Response | The cadet will write a performance check. | Upon completion of the lessons associated with PO 429. | Chapter 3, Annex B, Appendix 5 Written Test. | Oral assistance if required. |
| ***POs 431/432/436/437 (Aviation Subjects) – Combined Assessment*** | | | | | | | | |
| 431<br>432<br>436<br>437 PC | PO 431<br>PO 432<br>PO 436<br>PO 437 | To assess the cadets' ability to master knowledge of aviation subjects. | Knowledge Mastery | Selected Response | The cadet will write a performance check. | Upon completion of the mandatory lessons associated with POs 431, 432, 436 and 437. | Chapter 3, Annex B, Appendix 6 Written Test. | Assistance is denied. |
| ***PO 440 – Discuss Aerospace Structures*** | | | | | | | | |
| 440 PC | PO 440 | To have the cadet participate in an aerospace activity. | Nil. | Nil. | The cadet is observed participating in an aerospace activity. | Anytime. | Nil. | Nil. |
| ***PO 460 – Describe Aerodrome Operations Career Opportunities*** | | | | | | | | |
| Nil. | | | | | | | | |
| ***PO 470 – Recognize Aspects of Aircraft Manufacturing and Maintenance*** | | | | | | | | |
| Nil. | | | | | | | | |
| ***PO 490 – Participate in a Aircrew Survival Exercise*** | | | | | | | | |
| 490 PC | PO 490 | To assess the cadet's ability to perform the following skills: operating a stove and lantern, tying knots and lashings, using a Global Positioning System (GPS) receiver, and lighting fires with improvised methods. | Skills | Performance Assessment | The cadet is observed as they perform the various skills to participate in a field exercise to include: operating a stove and lantern, tying knots and lashings, using a Global Positioning System (GPS) receiver, and lighting fires with improvised methods. | After completion of instruction and during a field exercise. | Chapter 3, Annex B, Appendix 7 checklist and associated rubric. | Assistance is denied. |

THIS PAGE INTENTIONALLY LEFT BLANK

# ANNEX B, APPENDIX 1

# 403 PC

# ASSESSMENT INSTRUCTIONS

## PREPARATION

### PRE-ASSESSMENT INSTRUCTIONS

Review the assessment plan, assessment instructions, 403 PC Assessment Rubrics, Assessment Checklists and become familiar with the material prior to conducting the assessment.

This PC consists of two parts, a leadership assignment and a leadership appointment. There is no time allotted for the PC as it is to be administered whenever and wherever Proficiency Level Four cadets lead cadets through a leadership assignment or appointment.

**Leadership Assignment.** The cadet shall be given a minimum of one practice leadership assignment which will be assessed using the 403 PC Assessment Rubric – Leadership Assignment. The cadet will reflect and self-assess after the practice leadership assignment using the same rubric. The formal leadership assignment will be given and assessed using the same rubric.

**Leadership Appointment.** The formal leadership appointment will be given and assessed using the 403 PC Assessment Rubric – Leadership Appointment. The cadet will reflect and self-assess after the leadership appointment using the same rubric. The leadership appointment assessment shall be recorded on the cadet's qualification record.

Photocopy the 403 PC Assessment Rubrics.

Photocopy the 403 PC Assessment Checklists.

### PRE-ASSESSMENT ASSIGNMENT

The cadet shall review the 403 PC Assessment Rubrics and Checklists and become familiar with the assessment criteria.

### ASSESSMENT METHOD

Performance assessment and personal communication were chosen as it allows the assessor to observe the cadet's ability to perform the required skill(s) and make a judgment on the quality of performance.

## CONDUCT OF ASSESSMENT

### PURPOSE

The purpose of this PC is to assess the cadet's ability to lead cadets through a leadership assignment and appointment.

### RESOURCES

- Two 403 PC Assessment Checklists,
- Two 403 PC Assessment Rubrics, and
- As per the leadership assignment or appointment.

### ASSESSMENT ACTIVITY LAYOUT

As per the leadership assignment or appointment.

**ASSESSMENT ACTIVITY INSTRUCTIONS – LEADERSHIP ASSIGNMENT**

1. Communicate to the cadet their leadership assignment either verbally or in writing.
2. Ensure the cadet understands the leadership assignment.
3. Have the cadet conduct the leadership assignment.
4. Using the Assessment Rubrics as a guide, make notes of observations and record results on the corresponding Assessment Checklist.

The assessment of leadership abilities is subjective; however, the assessor's responsibility is to be as positive as possible.

5. Have the cadet assess their performance using the Assessment Rubric. Ensure the cadet understands their self-assessment will not be recorded on their qualification record.

**ASSESSMENT ACTIVITY INSTRUCTIONS – LEADERSHIP APPOINTMENT**

1. Meet with the cadet to assign their leadership appointment. The Training Officer shall have developed a list of appointments, based on the examples suggested in M403.06 (Act as a Team Leader During a Leadership Appointment).
2. Ensure the cadet understands the leadership appointment.
3. Have the cadet carry out the leadership appointment.
4. Using the Assessment Rubrics as a guide, evaluate the cadet's leadership ability by observation throughout the duration of the leadership appointment, make notes of observations and record results on the corresponding Assessment Checklist.

The assessment of leadership abilities is subjective; however, the assessor's responsibility is to be as positive as possible.

5. Have the cadet self-assess their performance using the Assessment Rubric. Ensure the cadet understands their self-assessment will not be recorded on their qualification record.

## POST ASSESSMENT INSTRUCTIONS

**RECORDING ASSESSMENT RESULTS**

1. The overall performance assessment for PO 403 is a combined result of the leadership assignment and appointment assessments. Indicate the overall performance assessment on the Assessment Checklist as:
   a. **Incomplete**. The cadet has not achieved the performance standard by receiving an “incomplete” on more than four (between both assessments) of the criteria;
   b. **Completed With Difficulty**. The cadet has achieved the performance standard by receiving an “incomplete” on less than five (between both assessments) of the criteria;

c. **Completed Without Difficulty**. The cadet has achieved the performance standard by receiving a minimum of “completed with difficulty” on all criteria and “completed without difficulty” on nine (between both assessments) or more of the criteria; or

d. **Exceeded Standard**. The cadet has achieved the performance standard by receiving a minimum of “completed without difficulty” on all criteria and “exceeded standard” on 12 (between both assessments) or more of the criteria.

2. Record notes and observations in the assessor’s feedback section of the Assessment Checklist.

3. Sign and date the Assessment Checklist.

4. Ensure a copy of the Assessment Checklists is attached to the cadet's training file.

5. The overall result will be recorded on the Proficiency Level Four Qualification Record located at Chapter 3, Annex C.

**PROVIDING ASSESSMENT FEEDBACK**

Discuss the cadet's self-assessment on their performance.

Following each assessment, ask the cadet what they felt went right during the leadership assessment, what did not go well and ask the cadet how they would improve their performance if the leadership assignment or appointment was given to them again.

Discuss the performance results of each section of the Assessment Rubric with the cadet.

Discuss the overall performance results with the cadet and provide the cadet with a copy of the completed Assessment Checklists.

Because of the duration and overall nature of the leadership appointment, feedback needs to be provided on an ongoing basis. Additional time will also need to be scheduled upon the conclusion of the appointment for final feedback.

**403 PC ASSESSMENT RUBRIC**
**LEADERSHIP ASSIGNMENT**

| | Incomplete (I) | Completed With Difficulty (D) | Completed Without Difficulty (C) | Exceeded the Standard (E) |
|---|---|---|---|---|
| **Select a leadership approach.** | Did not select an approach appropriate to the assignment. | Selected an approach and was challenged with balancing focus on the team members and the goal. | Selected an approach and strived to balance team members and the goal and simplicity and safety of the task. | Selected the most appropriate approach with a strong balance of team members and the goal and simplicity and safety of the task. |
| **Communicate as a team leader.** | Did not communicate with team members. | Communicated with team members occasionally. Team members needed clarification on many occasions. | Communicated with team members on many occasions. Team members needed few clarifications. | Communicated to the team throughout the leadership task. Team members did not need clarification. |
| **Supervise team members.** | Did not supervise team members. | Only supervised team members at the beginning and / or end of the leadership assignment. | Supervised throughout the leadership assignment making some corrections when necessary. | Supervised throughout the leadership assignment making corrections as necessary. |
| **Solve problems.** | Did not solve problems. | Attempted to solve some problems and selected inefficient problem solving methods. | Solved most problems as they arose and often selected the appropriate problem solving method. | Solved problems as they arose and selected the most appropriate problem solving method. |
| **Motivate team members.** | Did not motivate team members. | Only motivated periodically and without enthusiasm. | Motivated frequently and with enthusiasm, with attention at times to both individuals and the team. | Motivated consistently and with enthusiasm, addressing both individuals and the team. |
| **Provide feedback to team members.** | Did not provide feedback to team members. | Provided select feedback; was not always frequent, accurate, specific and / or timely. | Provided periodic feedback and was often frequent, accurate, specific and / or timely. | Provided consistent feedback and was regularly frequent, accurate, specific and / or timely. |
| **Meet expectations of team members.** | Made no effort to meet the needs and expectations of team members. | Made some efforts to meet the needs and expectations of team members but with limited results. | Made considerable efforts to meet the needs and expectations of team members with adequate results. | Made consistent efforts to meet the needs and expectations of team members with solid results. |
| **Complete the leadership assignment.** | Did not complete the leadership assignment. | | Completed the leadership assignment. | |
| **Perform self-assessment.** | Did not complete the self-assessment. | | Completed the self-assessment. | |

**403 PC ASSESSMENT RUBRIC**
**LEADERSHIP ASSIGNMENT**

| | Incomplete (I) | Completed With Difficulty (D) | Completed Without Difficulty (C) | Exceeded the Standard (E) |
|---|---|---|---|---|
| **Select a leadership approach.** | Did not select appropriate approach(es) throughout the appointment. | Selected an approach and was challenged with balancing focus on the team members and the goal throughout the appointment. | Selected approach(es) throughout the appointment and strived to balance team members and the goal and simplicity and safety of the task. | Selected the most appropriate approach(es) throughout the appointment with a strong balance of team members and the goal and simplicity and safety of the task. |
| **Communicate as a team leader.** | Did not communicate with team members. | Did not communicate with team members frequently enough. Team members needed clarification on many occasions. | Communicated with team members on many occasions. Team members needed few clarifications. | Communicated with team members consistently throughout the leadership appointment. Team members did not need clarification. |
| **Supervise team members.** | Did not supervise team members. | Did not successfully apply the principles of supervision; supervision was infrequent throughout the appointment. | Supervised throughout the leadership appointment, making some corrections when necessary. | Supervised consistently throughout the leadership assignment, making corrections as necessary. |
| **Solve problems.** | Did not solve problems. | Attempted to solve some problems and selected inefficient problem solving methods. | Solved most problems as they arose and often selected the appropriate problem solving method. | Solved problems as they arose and selected the most appropriate problem solving method. |
| **Motivate team members.** | Did not motivate team members. | Only motivated periodically and without enthusiasm. | Motivated frequently and with enthusiasm, with attention at times to both individuals and the team. | Motivated consistently and with enthusiasm, addressing both individuals and the team. |
| **Provide feedback to team members.** | Did not provide feedback to team members. | Provided select feedback; was not always frequent, accurate, specific and / or timely. | Provided periodic feedback and was often frequent, accurate, specific and / or timely. | Provided consistent feedback and was regularly frequent, accurate, specific and / or timely. |
| **Meet expectations of team members.** | Made no effort to meet the needs and expectations of team members. | Made some efforts throughout the appointment to meet the needs and expectations of team members but with limited results. | Made considerable efforts throughout the appointment to meet the needs and expectations of team members with adequate results. | Made consistent efforts throughout the appointment to meet the needs and expectations of team members with solid results. |
| **Perform self-assessment.** | Did not complete the self-assessment. | | Completed the self-assessment. | |

# 403 PC ASSESSMENT CHECKLIST
# LEADERSHIP ASSIGNMENT

Cadet's Name: _____ Squadron: _____

Date: _____ Flight: _____

| | Assessment (circle one) | Notes |
|---|---|---|
| **Select a leadership approach.** | **I D C E** | |
| **Communicate as a team leader.** | **I D C E** | |
| **Supervise team members.** | **I D C E** | |
| **Solve problems.** | **I D C E** | |
| **Motivate team members.** | **I D C E** | |
| **Provide feedback to team members.** | **I D C E** | |
| **Meet expectations of team members.** | **I D C E** | |
| **Complete the leadership assignment.** | **I C** | |
| **Perform self-assessment.** | **I C** | |

I = Incomplete D = Completed With Difficulty C = Completed Without Difficulty E = Exceeded Standard

| | |
|---|---|
| **Assessor's Name:** | **Position:** |
| **Assessor's Signature:** | **Date:** |

*This form shall be reproduced locally.*

# 403 PC ASSESSMENT CHECKLIST
# LEADERSHIP APPOINTMENT

Cadet's Name: _____ Squadron: _____

Date: _____ Flight: _____

| | Assessment (circle one) | Notes |
|---|---|---|
| **Select a leadership approach.** | **I D C E** | |
| **Communicate as a team leader.** | **I D C E** | |
| **Supervise team members.** | **I D C E** | |
| **Solve problems.** | **I D C E** | |
| **Motivate team members.** | **I D C E** | |
| **Provide feedback to team members.** | **I D C E** | |
| **Meet expectations of team members.** | **I D C E** | |
| **Perform self-assessment.** | **I C** | |

I = Incomplete D = Completed With Difficulty C = Completed Without Difficulty E = Exceeded Standard

| **Assessor's Name:** | **Position:** |
|---|---|
| **Assessor's Signature:** | **Date:** |

*This form shall be reproduced locally.*

## 403 PC ASSESSMENT CHECKLIST
## OVERALL ASSESSMENT

The PO 403 Overall Assessment includes the evaluation of both the leadership assignment and the leadership appointment.

***Assessor's feedback:***

| | PO 403 Overall Assessment | | | | | | | |
|---|---|---|---|---|---|---|---|---|
| **Check One** | **Incomplete** | | **Completed With Difficulty** | | **Completed Without Difficulty** | | **Exceeded Standard** | |
| **Overall Performance** | The cadet has not achieved the performance standard by receiving an "incomplete" on more than four (between both assessments) of the criteria. | | The cadet has achieved the performance standard by receiving an "incomplete" on less than five (between both assessments) of the criteria. | | The cadet has achieved the performance standard by receiving a minimum of "completed with difficulty" on all criteria and "completed without difficulty" on nine (between both assessments) or more of the criteria. | | The cadet has achieved the performance standard by receiving a minimum of "completed without difficulty" on all criteria and "exceeded standard" on 12 (between both assessments) or more of the criteria. | |

| | |
|---|---|
| **Assessor's Name:** | **Position:** |
| **Assessor's Signature:** | **Date:** |

*This form shall be reproduced locally.*

# ANNEX B, APPENDIX 2

# 404 PC – PERSONAL FITNESS AND HEALTHY LIVING

# ASSESSMENT INSTRUCTIONS

## GENERAL

No time is allotted for this PC, as it is to be administered whenever the cadet hands in their completed Physical Activity Tracker.

The Physical Activity Tracker and the requirements of this PC are covered during EO MX04.01 (Participate in 60 Minutes of Moderate- to Vigorous-Intensity Physical Activity [MVPA] and Track Participation in Physical Activities).

## PRE-ASSESSMENT INSTRUCTIONS

1. Gather the 404 PC Personal Fitness and Healthy Living Assessment Form.
2. Meet with the cadet to ensure they have received the Physical Activity Tracker, and that they are familiar with the assessment requirements.

MVPA (moderate- to vigorous-intensity physical activity) is a combination of moderate and vigorous intensity activity:

- Moderate-intensity physical activities will cause teens to sweat a little and to breathe harder (eg, skating or bike riding).
- Vigorous-intensity physical activities will cause teens to sweat and be ‘out of breath’ (eg, running or rollerblading).

## CONDUCT OF ASSESSMENT

1. Have the cadet complete their Physical Activity Tracker and meet with them as required to deal with any difficulties that may arise. Make notes of observations.
2. Once the cadet has completed the Physical Activity Tracker, evaluate their performance using the assessment form.
3. Conduct a debriefing. Ask the cadet what they felt went well and what they would improve upon if the assessment was given to them again.
4. Discuss the overall performance results with the cadet and provide the cadet with a copy of the completed 404 PC Personal Fitness and Healthy Living Assessment Form.

## POST ASSESSMENT INSTRUCTIONS

1. Place a copy of the 404 PC Personal Fitness and Healthy Living Assessment Form in the cadet's training file.
2. Record the overall result on the Proficiency Level Four Qualification Record.

**404 PC - PERSONAL FITNESS AND HEALTHY LIVING**
**ASSESSMENT FORM**

Cadet's Name: _____ Date: _____

***Assessor's feedback:***

| | PO 404 Assessment Results | | | | | | |
|---|---|---|---|---|---|---|---|
| **Check One** | **Incomplete** | | **Completed With Difficulty** | | **Completed Without Difficulty** | | **Exceeded Standard** | |
| **Overall Performance** | The cadet did not complete a minimum of 60 minutes of MVPA daily for at least 20 days over four consecutive weeks. | | | | The cadet has achieved the performance standard by completing a minimum of 60 minutes of MVPA daily for 20 days over four consecutive weeks. | | The cadet has exceeded the performance standard by completing a minimum of 60 minutes of MVPA daily for 24 days or more over four consecutive weeks. | |

| | |
|---|---|
| **Assessor's Name:** | **Position:** |
| **Assessor's Signature:** | **Date:** |

*This form shall be reproduced locally.*

# ANNEX B, APPENDIX 3

# 408 PC

# ASSESSMENT INSTRUCTIONS

## PREPARATION

### PRE-ASSESSMENT INSTRUCTIONS

Review the assessment plan, assessment instructions and 408 PC Assessment Checklist and become familiar with the material prior to conducting the assessment.

Photocopy the 408 PC Assessment Checklist for each cadet.

Ensure each cadet has received a parade sequence aide-mémoire card (located at A-CR-CCP-804/PF-001, *Proficiency Level Four Instructional Guides*, EO M408.03 [Command a Squad]).

### PRE-ASSESSMENT ASSIGNMENT

Have the cadet review the assessment activity instructions and the 408 PC Assessment Checklist to become familiar with the material prior to participating in the assessment.

### ASSESSMENT METHOD

Performance assessment was chosen to observe and evaluate the cadet commanding a flight on parade.

## CONDUCT OF ASSESSMENT

### PURPOSE

The purpose of this PC is to assess the cadet's ability to command a flight on parade.

### RESOURCES

- 408 PC Assessment Checklist, and
- Parade sequence aide-mémoire card.

### ASSESSMENT ACTIVITY LAYOUT

This assessment shall be conducted in a drill hall or outdoor parade square in favourable weather.

Assessments may be conducted throughout the year, during parades (eg, opening parade, closing parade, ceremonial parades).

**ASSESSMENT ACTIVITY INSTRUCTIONS**

After observing each skill being performed, make a judgment and indicate on the Assessment Checklist whether the skill was:

**Incomplete.** The skill was not attempted or not completed even with assistance;

**Completed with difficulty.** The skill was completed with some difficulty / assistance or with heavy reliance on the parade sequence aide-mémoire card;

**Completed without difficulty.** The skill was completed without difficulty / assistance or required only occasional reference to the parade sequence aide-mémoire card; or

**Exceeded standard.** The skill was completed without any difficulty / assistance and required no use of the parade sequence aide-mémoire card.

Make notes of observations for the purpose of providing descriptive post-assessment feedback.

Assess the cadet's performance for each skill and record the results on the Assessment Checklist.

Cadets may be given unlimited re-tests within the resources of the cadet squadron to meet the standard for each skill. Where time permits, cadets may re-test to improve their results.

## POST ASSESSMENT INSTRUCTIONS

**RECORDING ASSESSMENT RESULTS**

Indicate the overall performance assessment on the Assessment Checklist as:

**Incomplete.** The cadet has not achieved the performance standard by not completing at least one of the required areas;

**Completed with difficulty.** The cadet has achieved the performance standard by completing one or more or the required objectives with difficulty;

**Completed without difficulty.** The cadet has achieved the performance standard by completing all objectives without difficulty; or

**Exceeded standard.** The cadet has achieved the performance standard by exceeding the standard on all objectives.

Record notes made in the assessor’s feedback section of the Assessment Checklist.

Sign and date the Assessment Checklist.

Ensure a copy of the Assessment Checklist is attached to the cadet's training file.

The overall result will be recorded on the Proficiency Level Four Qualification Record located at Chapter 3, Annex C.

**PROVIDING ASSESSMENT FEEDBACK**

Discuss the overall performance results with the cadet and provide them with a copy of the completed checklist.

## 408 PC ASSESSMENT CHECKLIST

Cadet's Name: _____ Date: _____

| Analytical Performance Assessment: | Incomplete<br>The skill was not attempted or not completed even with assistance. | Completed With Difficulty<br>The skill was completed with some difficulty / assistance or with heavy reliance on the parade sequence aide-mémoire card. | Completed Without Difficulty<br>The skill was completed without difficulty / assistance or required only occasional reference to the parade sequence aide-mémoire card. | Exceeded Standard<br>The skill was completed without any difficulty / assistance and required no use of the parade sequence aide-mémoire card. |
|---|---|---|---|---|
| **Fall In** | | | | |
| The cadet assumed the proper command position—centred and three paces in front of the flight. | | | | |
| The cadet ordered the flight to stand at ease. | | | | |
| Once the last flight was ordered, the cadet turned about, observed the standard pause and stood at ease. | | | | |
| **Inspection** | | | | |
| The cadet ensured the flight was at attention. | | | | |
| The cadet awaited the arrival of the Reviewing Officer (RO) three paces in front of the flight marker. | | | | |
| The cadet saluted (if required) and reported the flight to the RO. | | | | |
| The cadet guided the RO through the inspection of each rank of the flight. | | | | |

| | | | | |
|---|---|---|---|---|
| The cadet saluted (if required) and asked for permission to carry on. | | | | |
| The cadet returned to the front of the flight, centred and three paces in front. | | | | |
| The cadet ordered the flight to close order march and stand at ease. | | | | |
| The cadet executed an about turn and stood at ease. | | | | |
| **March Past** | | | | |
| The cadet executed all commands given by the parade commander. | | | | |
| The cadet assumed the correct position in front of the flight throughout the march past. | | | | |
| The cadet correctly delivered all required commands throughout the march past. | | | | |
| Once commanded to advance, the cadet turned and wheeled into position in front of the flight. | | | | |
| **Fall Out** | | | | |
| Once commanded to dismiss, the cadet observed the standard pause, saluted if an officer was present and then marched off the parade square. | | | | |

*This form shall be reproduced locally.*

Assessor's Feedback:

| | PO 408 Overall Assessment | | | | | | | |
|---|---|---|---|---|---|---|---|---|
| **Check One** | **Incomplete** | | **Completed With Difficulty** | | **Completed Without Difficulty** | | **Exceeded Standard** | |
| **Overall Performance** | The cadet has not achieved the performance standard by not completing at least one of the required areas. | | The cadet has achieved the performance standard by completing one or more or the required objectives with difficulty. | | The cadet has achieved the performance standard by completing all objectives without difficulty. | | The cadet has achieved the performance standard by exceeding the standard on all objectives. | |

| | |
|---|---|
| **Assessor's Name:** | **Position:** |
| **Assessor's Signature:** | **Date:** |

*This form shall be reproduced locally.*

THIS PAGE INTENTIONALLY LEFT BLANK

# ANNEX B, APPENDIX 4

# 409 PC

# ASSESSMENT INSTRUCTIONS

## PREPARATION

### PRE-ASSESSMENT INSTRUCTIONS

The course officer shall communicate with the training officer to:

1. place the Proficiency Level Four cadets into the Proficiency Level One and Proficiency Level Two instructor schedules;
2. ensure the cadets are assigned a 30-minute lesson at least two weeks prior to conducting this assessment, to include:
   a. a lesson specification, and
   b. an instructional guide; and
3. assign an assessor to each lesson.

Ensure that all resources requested by the cadets are available.

Review the assessment plan, assessment instructions and 409 PC Assessment Rubric and Checklist and become familiar with the material prior to conducting the assessment.

Photocopy the 409 PC Assessment Checklist for each cadet.

Review the lesson content and become familiar with the material prior to assessing the lesson.

### PRE-ASSESSMENT ASSIGNMENT

Each cadet shall review the 409 PC Assessment Rubric and Checklist and become familiar with the assessment criteria prior to instructing their lesson.

Each cadet is to prepare to instruct a 30-minute lesson, by:

1. researching lesson content;
2. planning a lesson;
3. developing instructional aids; and
4. preparing the lesson location.

### ASSESSMENT METHOD

Performance assessment was chosen as it allows the assessor to observe the cadet while instructing a lesson and make a judgement on the cadet’s level of preparation, classroom management skills, use of instructional methods, use of instructional aids and overall instructional techniques.

## CONDUCT OF ASSESSMENT

### PURPOSE

The purpose of this assessment is to assess the cadet's ability to prepare and instruct a 30-minute lesson to Proficiency Level One and Two cadets in a real-life setting, during a regular training session.

**RESOURCES**

- 409 PC Assessment Rubric,
- 409 PC Assessment Checklists, and
- As per the lesson assigned.

**ASSESSMENT ACTIVITY LAYOUT**

Classroom or training area large enough to accommodate the entire group.

**ASSESSMENT ACTIVITY INSTRUCTIONS**

This PC is assessed during EO M409.05 / EO C409.02 (Instruct a 30-Minute Lesson), or any additional opportunity thereafter.

Each cadet, prior to the start of EO M409.05 (Instruct a 30-Minute Lesson), will be required to:

1. research lesson content;
2. plan a lesson;
3. develop instructional aids; and
4. set up the lesson location.

During the time allotted for this lesson each cadet will:

1. provide a copy of their written lesson plan to the assessor;
2. instruct a 30-minute lesson by:
    a. introducing the lesson;
    b. presenting the content of the lesson
    c. confirming the knowledge / skills learned during the lesson; and
    d. concluding the lesson; and
3. participate in a individual feedback session with the assessor upon completion of the lesson.

Using the 409 PC Assessment Rubric as a guide, the assessor shall make notes of observations and record results on the 409 PC Assessment Checklist.

Should any content errors or omissions be made during the conduct of the lesson, the assessor shall take appropriate actions to ensure the cadets receive the correct information.

## POST ASSESSMENT INSTRUCTIONS

### RECORDING ASSESSMENT RESULTS

1. The overall result will be recorded on the Proficiency Level Four Qualification Record located at Chapter 3, Annex C. Indicate the overall performance assessment on the qualification record as:

   a. **Incomplete**. The cadet has not achieved the performance standard by receiving an “incomplete” on more than three of the criteria listed on the assessment checklist;

   b. **Completed With Difficulty**. The cadet has achieved the performance standard by receiving an incomplete on not more than three of the criteria;

   c. **Completed Without Difficulty**. The cadet has achieved the performance standard by receiving a minimum of “completed with difficulty” on all criteria and “completed without difficulty” on 10 or more of the criteria; or

   d. **Exceeded Standard**. The cadet has achieved the performance standard by receiving a minimum of “completed without difficulty” on all criteria and “exceeded standard” on seven or more of the criteria.

2. Record notes made in the assessor’s feedback section of the assessment checklist.

3. Sign and date the assessment checklist.

4. Ensure a copy of the assessment checklist is attached to the cadet's training file.

### PROVIDING ASSESSMENT FEEDBACK

This assessment is accomplished through direct / immediate feedback with the cadet upon completion of the period of instruction. The assessor should offer feedback and suggestions for improvement to the cadet based on the 409 PC Assessment Rubric and Checklist.

Discuss the overall performance results with the cadet and provide them with a copy of the completed checklist.

## 409 PC ASSESSMENT RUBRIC

| | Incomplete (I) | Completed With Difficulty (D) | Completed Without Difficulty (C) | Exceeded Standard (E) |
|---|---|---|---|---|
| **Lesson Preparation** | | | | |
| **Lesson plan** | The lesson plan was not submitted, it had insufficient detail to deliver a full period of instruction or it was not developed IAW the QSP. | The lesson plan was disorganized / hard to follow or was incomplete or included few details of how TPs were to be presented. | The lesson plan was neat and easy to follow. The introduction, body, end of lesson confirmation and conclusion were complete and accurate. | The lesson plan was neat and easy to follow. The introduction, body, end of lesson confirmation and conclusion were complete, accurate and detailed enough for another instructor to follow and implement without difficulty. |
| **Instructional aids** | The instructional aids were not developed, not relevant or were of poor quality. | The instructional aids were relevant, but their ease of use and effectiveness were questionable. | The instructional aids were relevant, easy to use and assisted in clarifying lesson content. | The instructional aids were relevant, easy to use and assisted in clarifying lesson content. In addition, instructional aids were creative, well thought-out and extra effort on the cadet's part was evident. |
| **Classroom / training area set up** | Set-up of the classroom / training area was not suitable to the lesson. | Set-up of the classroom / training area was suitable to the lesson, however some elements were overlooked. | The classroom / training area was well set up, with due consideration given to such things as:<br>• functional seating formation,<br>• lighting, and<br>• instructional aids were easily accessible and ready to use, and<br>• distractions were minimized. | N/A |
| **Lesson Introduction** | | | | |
| **Review of previous lesson (if applicable)** | The cadet did not review the previous lesson. | The cadet stated the topic of the previous lesson. | The cadet stated the topic of the previous lesson and provided a brief summary of the content. | N/A |
| **Introduction of lesson** | The cadet did not provide an introduction to the lesson. | The cadet stated what will be learned, but was unclear in the description of why it is important or where the knowledge / skills will be applied. | The cadet clearly described what will be learned, why it is important and where the knowledge / skills will be applied. | The cadet clearly described what will be learned, why it is important and where the knowledge / skills will be applied in a creative and engaging way. |
| **Lesson Body** | | | | |
| **Method(s) of instruction** | The cadet's choice of method was not appropriate to the content or the audience. | The cadet's choice of method was appropriate but they displayed some difficulty using the method. | The cadet's choice of method was appropriate and they displayed no difficulty using the method. | N/A |

| | Incomplete (I) | Completed With Difficulty (D) | Completed Without Difficulty (C) | Exceeded Standard (E) |
|---|---|---|---|---|
| **Learning environment** | The cadet did not ensure the physical safety of the class, and/ or the cadet made no attempt to employ stress and classroom management techniques, as described in EO M409.02. | The cadet ensured the physical safety of the class at all times. The cadet attempted to employ stress and classroom management techniques, however experienced difficulty using them effective and timely manner. | The cadet ensured the physical safety of the class at all times. The cadet employed stress classroom management techniques, as necessary, in an effective and timely manner. | The cadet ensured the physical safety of the class at all times. The cadet always controlled positive and negative stress, and displayed excellent classroom management techniques. |
| **Effective use instructional aids** | The cadet did not use instructional aids. | The instructional aids were difficult to see / use, or were introduced at an ineffective time. | The instructional aids were clearly displayed and were appropriately introduced. | N/A |
| **Satisfaction of learner needs** | The lesson was delivered in a way that was inappropriate for the developmental period of the audience and did not present visual, auditory or kinesthetic learning opportunities. | Some aspects of the lesson delivery were not appropriate for the developmental period of the audience. The cadet included little variety with regard to providing visual, auditory or kinesthetic learning opportunities. | The lesson satisfied the needs of the developmental period of the audience. The cadet included some variety of visual, auditory and kinesthetic learning opportunities. | The lesson satisfied the needs of the developmental period of the audience. The cadet included many visual, auditory and kinesthetic learning opportunities throughout the lesson. |
| **Accuracy of lesson content** | The cadet displayed limited understanding of the lesson content and was unable to provide accurate explanations, demonstrations and/or clarification. | The cadet displayed a general understanding of the lesson content but struggled with the explanation, demonstration and/or clarification of some of the content. | The cadet displayed a sound understanding of lesson content and provided accurate explanations, demonstrations and/ or clarification without difficulty. | The cadet displayed a mastery of the lesson content. |
| **TP confirmation** | The cadet did not use questions or an activity to confirm the understanding of the TP content; and did not adjust the instruction based on audience comprehension. | The cadet used questions or an activity to confirm the understanding of the TP content, however made little effort to adjust instruction based on audience comprehension. | The cadet used questions or an activity to confirm the understanding of the TP content, and as necessary, attempted to adjust instruction based on audience comprehension. | The questions or activity cadet creatively confirmed understanding at the end of each TP and easily adjusted instruction based on audience comprehension. |
| **End of lesson confirmation** | The knowledge or skills covered in the lesson were not confirmed using questions or an activity. | Questions or an activity was used as an end of lesson confirmation of knowledge or skills, however all teaching points were not covered. | Questions or an activity was used as an end of lesson confirmation of knowledge or skills and all teaching points were covered. | All knowledge or skills covered in the lesson were confirmed in a creative and engaging way. |
| **Lesson Conclusion** | | | | |
| **Lesson summary** | The cadet did not re-state the objective of the lesson and did not summarize important points / areas for improvement. | The cadet re-stated the objectives of the lesson however struggled to summarize important points / areas for improvement. | The cadet re-stated the objectives of the lesson and concisely summarized important points / areas for improvement. | N/A |
| **Re-motivation** | The cadet did not attempt to re-motivate the cadets. | N/A | The cadet attempted to re-motivate the cadets. | N/A |

| | Incomplete (I) | Completed With Difficulty (D) | Completed Without Difficulty (C) | Exceeded Standard (E) |
|---|---|---|---|---|
| **Description of next lesson** | The cadet did not describe the next lesson. | The cadet stated the topic of the next lesson. | The cadet stated the topic of the next lesson and provided a brief and accurate description of the lesson content. | N/A |
| **Communication** | | | | |
| **Voice control** | The cadet did not speak clearly or consistently spoke too quickly or quietly to be understood. | The cadet was understood, however struggled with the use of pitch, tone, volume, speed, and pauses to articulate and place emphasis on points where necessary. | The cadet spoke clearly and made clear attempts to control pitch, tone, volume, speed, and pauses to articulate and place emphasis on points where necessary. | The cadet spoke clearly and made excellent use of pitch, tone, volume, speed, and pauses to articulate and place emphasis on points where necessary. |
| **Body language, dress and deportment** | The cadet exhibited inappropriate body language and/or poor dress and deportment. | The cadet attempted to use body language to help communicate and emphasise points and exhibited acceptable dress and deportment. | The cadet easily incorporated the use of body language to help communicate and emphasise points and exhibited acceptable dress and deportment. | The cadet easily incorporated the use of body language to help communicate and emphasise points and exhibited a high standard of dress and deportment. |
| **Questioning techniques** | The cadet did not use any questions or apply the questioning sequence (pose, pause, pounce, ponder and praise). | The cadet used appropriate types of questions but inconsistently applied the questioning sequence (pose, pause, pounce, ponder and praise). | The cadet used a variety of questions and consistently applied the questioning sequence (pose, pause, pounce, ponder and praise). | N/A |
| **Time Management** | | | | |
| **Time Management** | The lesson was not completed within the allotted time, with more than 5 minutes deviation. | Time planned for and/or spent on individual TPs / activities was somewhat inaccurate or insufficient however the lesson was completed within the allotted time (+ / - 5 minutes). | Time planned for and/or spent on individual TPs / activities was appropriate and the lesson was completed within the allotted time (+ / - 5 minutes). | N/A |

## 409 PC ASSESSMENT CHECKLIST

Cadet's Name: _____ Squadron: _____

Date: _____ Flight: _____

| | Assessment (circle one) | Notes |
|---|---|---|
| **Lesson Preparation** | | |
| **Lesson Plan** | I D C E | |
| **Instructional aids** | I D C E | |
| **Classroom / training area set up** | I D C | |
| **Lesson Introduction** | | |
| **Review of previous lesson (if applicable)** | I D C | |
| **Introduction of lesson** | I D C E | |
| **Lesson Body** | | |
| **Method(s) of instruction** | I D C | |
| **Learning environment** | I D C E | |
| **Effective use of instructional aids** | I D C | |
| **Satisfaction of learner needs** | I D C E | |
| **Accuracy of lesson content** | I D C E | |
| **TP confirmation** | I D C E | |
| **End of lesson confirmation** | I D C E | |
| **Lesson Conclusion** | | |
| **Lesson summary** | I D C | |
| **Re-motivation** | I C | |
| **Description of next lesson** | I D C | |

I = Incomplete D = Completed With Difficulty C = Completed Without Difficulty E = Exceeded Standard

| | Assessment (circle one) | Notes |
|---|---|---|
| **Communication** | | |
| **Voice control** | I D C E | |
| **Body language, dress and deportment** | I D C E | |
| **Questioning techniques** | I D C | |
| **Time Management** | | |
| **Time management** | I D C | |

I = Incomplete D = Completed With Difficulty C = Completed Without Difficulty E = Exceeded Standard

***Assessor's Feedback:***

| | PO 409 Overall Assessment | | | | | | | |
|---|---|---|---|---|---|---|---|---|
| **Check One** | **Incomplete** | | **Completed With Difficulty** | | **Completed Without Difficulty** | | **Exceeded Standard** | |
| **Overall Performance** | The cadet has not achieved the performance standard by receiving an "incomplete" on more than three of the criteria. | | The cadet has achieved the performance standard by receiving an "incomplete" on not more than three of the criteria and a minimum of "completed with difficulty" on all other criteria. | | The cadet has achieved the performance standard by receiving a minimum of "completed with difficulty" on all criteria and "completed without difficulty" on 10 or more of the criteria. | | The cadet has achieved the performance standard by receiving a minimum of "completed without difficulty" on all criteria and "exceeded standard" on 7 or more of the criteria. | |

| | |
|---|---|
| **Assessor's Name:** | **Position:** |
| **Assessor's Signature:** | **Date:** |

*This form shall be reproduced locally.*

# ANNEX B, APPENDIX 5

# 429 PC

# ASSESSMENT INSTRUCTIONS

## PREPARATION

### PRE-ASSESSMENT INSTRUCTIONS

Review the assessment plan, assessment instructions and 429 PC Tool Assessment and become familiar with the material prior to conducting the assessment.

Photocopy the 429 PC Assessment Tool for each cadet.

### PRE-ASSESSMENT ASSIGNMENT

Nil.

### ASSESSMENT METHOD

A selected response assessment was chosen to assess the cadet's knowledge of regulations and operating procedures for aviation transmission and licencing.

## CONDUCT OF ASSESSMENT

### PURPOSE

The purpose of this PC is to assess the cadet's knowledge of regulations and operating procedures for aviation transmission and licencing.

### RESOURCES

- 429 PC Assessment Tool, and
- Pen / pencil.

### ASSESSMENT ACTIVITY LAYOUT

This assessment shall be conducted in a classroom. Desks shall be separated as much as possible.

Criteria for assessing the cadet's knowledge are:

- **Incomplete.** Less than 60 percent.
- **Completed with difficulty.** 60–74 percent.
- **Completed without difficulty.** 75–89 percent.
- **Exceeded standard.** 90–100 percent.

### ASSESSMENT ACTIVITY INSTRUCTIONS

1. Ensure that the cadets have a pen / pencil.
2. Distribute the Assessment Tool to each cadet face up and instruct them to begin only when told to do so.
3. Explain the structure of the Assessment Tool.

4. Ensure the cadets have written their names on the top of the Assessment Tool.
5. Have the cadets write the Assessment Tool.
6. Give the cadets a 10-minute warning.
7. Give the cadets a 5-minute warning.
8. Collect the Assessment Tools.

## POST ASSESSMENT INSTRUCTIONS

### RECORDING ASSESSMENT RESULTS

The overall result for 429 PC Assessment will be recorded on the Proficiency Level Four Qualification Record located at Chapter 3, Annex C.

### PROVIDING ASSESSMENT FEEDBACK

Inform each cadet of their grade. No debriefing is required for those cadets who score 60 percent or more on the Assessment Tool. Cadets who score less than 60 percent will be debriefed individually. Those cadets are required to write a re-test. Any cadets who require a re-test must be tutored prior to the re-test. The content of the tutoring session will vary depending on the cadet. The aim of this session is to review the mistakes made in the original assessment and to prepare the cadet for the re-test.

**429 PC ASSESSMENT**

Cadet's Name: _____ Date: _____

**Multiple Choice (25 points)**

1. Who issues radio station licenses in Canada?

   a. Industry Canada.
   b. The Canadian Radio and Television Commission (CRTC).
   c. The Post Office.
   d. The Department of Communications.

2. The penalty for knowingly transmitting a false distress is:

   a. a fine up to $5 000 plus costs.
   b. a fine up to $5 000 and costs and / or imprisonment for up to 12 months.
   c. forfeiture of radio equipment.
   d. none of the above.

3. Your station is C-FBRD. The proper method to acknowledge the receipt of a distress message from aircraft C-FADA is:

   a. MAYDAY, C-FBRD, C-FBRD, C-FBRD, RECEIVED MAYDAY, OUT.
   b. MAYDAY, MAYDAY, MAYDAY, THIS IS C-FBRD, C-FBRD, C-FBRD, SILENCE MAYDAY.
   c. MAYDAY, C-FADA, C-FADA, C-FADA, THIS IS C-FBRD, C-FBRD, C-FBRD, RECEIVED MAYDAY.
   d. MAYDAY, C-FADA, C-FADA, C-FADA, THIS IS C-FBRD, C-FBRD, C-FBRD, MAYDAY RELAY OVER.

4. The order of priority for transmission in the aeronautical service is:

   a. distress, urgency, and communications relating to radio direction findings.
   b. distress, flight safety, and weather warnings.
   c. distress, urgency, and flight safety.
   d. distress, urgency, and safety communications.

5. Conversations heard over the air:

   a. must be identified in English only.
   b. must not exceed two minutes in length.
   c. are to be treated as strictly confidential.
   d. should be relayed to others who may be interested.

6. Radio equipment eligible for licensing in Canada must be:

   a. DOC type approved or technically acceptable for licensing.
   b. CAS approved.
   c. made in Canada.
   d. FCC approved.

7. Prohibited messages or transmissions are:

   a. messages of a personal nature to an addressee.
   b. a transmission with encrypted groups.
   c. mixed plain language and coded groups.
   d. false distress signals, profane language, and superfluous communications.

8. The Restricted Radiotelephone Operators Certificate is obtained by:

   a. paying an annual fee.
   b. demonstrating competence through testing.
   c. installing type-approved equipment on board.
   d. licencing your radio station.

9. Which of these could be a call sign for an aircraft station?

   a. Mobile three.
   b. Mobil Ted.
   c. C-GAYE.
   d. Cessna 150.

10. The signal MAYDAY indicates:

   a. an urgency situation.
   b. a safety message will follow.
   c. normal communications can resume on a restricted basis.
   d. a distress situation.

11. The spoken word / expression indicating an urgency situation is:

   a. PAN PAN.
   b. MAYDAY.
   c. SOS.
   d. EMERGENCY.

12. The call sign should be sent:

   a. at least on the initial call.
   b. only once during the call.
   c. as often as necessary until a reply is received.
   d. as quickly as possible to save air time.

13. Before making a radio transmission, you should:

   a. make a test transmission.
   b. listen first to ensure that the channel is clear.
   c. transmit the signal BREAK BREAK.
   d. adjust the gain control to maximum.

14. How can you recognize a signal emitted from an ELT?

   a. a varying tone heard on 121.5 MHz.
   b. a steady tone heard on 122.2 MHz.
   c. a pre-recorded message heard on 121.5 MHz.
   d. a pre-recorded message heard on 122.2 MHz.

15. Express $137.25 as it would be transmitted over the air:

    a. dollars wun tree seven dayseemal too fife.
    b. wun tree seven decimal too fife dollars.
    c. wun tree seven dollars, too fife cents.
    d. wun hundred thirty seven dayseemal too fife dollars.

16. Which of the following expressions follows proper radiotelephone procedure?

    a. Over and out.
    b. Repeat, over.
    c. Affirmative, over.
    d. Can you say again? Out.

17. Your aircraft registration is C-FGAC. How do you call another aircraft whose call sign is C-GBRD?

    a. CHARLIE FOXTROT GOLF ALPHA CHARLIE TO CHARLIE GOLF BRAVO ROMEO DELTA, OVER.
    b. CHARLIE GOLF BRAVO ROMEO DELTA, THIS IS CHARLIE FOXTROT GOLF ALPHA CHARLIE, OVER.
    c. FOXTROT GOLF ALPHA CHARLIE, COME IN PLEASE.
    d. FGAC HOW DO YOU READ ME, OVER.

18. Which time zone should be used when working in different time zones:

    a. Eastern Standard Time.
    b. Daylight Savings Time.
    c. Atlantic Standard Time.
    d. Coordinated Universal Time (UTC).

19. The term AFFIRMATIVE means:

    a. I request permission to ___.
    b. I agree, but please repeat.
    c. yes, or permission granted.
    d. please confirm, I do not understand.

20. What precautions should be taken before making a test transmission?

    a. Count from one to ten and back and ask anybody who is listening for a check.
    b. Listen to ensure no harmful interference will be caused to on-going communications on the frequency, and then make the test transmission, not exceeding ten seconds.
    c. Listen to make sure someone is on the air so that you can get a reply to your test.
    d. Request a signal check from any station.

21. What other search and rescue frequency is now commonly used in conjunction with 121.5 MHz?

    a. 243 MHz.
    b. 323 MHz.
    c. 500 MHz.
    d. 122.8 MHz.

22. The urgency call is comprised of:

    a. PAN PAN (spoken three times) THIS IS call sign of station (spoken three times).
    b. PAN PAN THIS IS call sign of station.
    c. PAN PAN (spoken three times) CALLING ALL STATIONS (spoken three times).
    d. MAYDAY (spoken three times) THIS IS call sign of station (spoken three times).

23. The word used to indicate that the transmission is ended but a response is expected, is:

    a. OVER.
    b. GO AHEAD.
    c. ROGER, OVER AND OUT.
    d. YOUR TURN.

24. To acknowledge a transmission you should say:

    a. 10-4.
    b. I RECEIVE.
    c. AFFIRMATIVE.
    d. ROGER.

25. Using the ITU Phonetic Alphabet, how would you spell the word BRAINS:

    a. BOSTON ROGER APPLE IDA NANCY SUGAR.
    b. BRAVO ROMEO ALPHA INDIA NOVEMBER SIERRA.
    c. BAKER ROBERTY ABLE ITALY NEW YORK SUSAN.
    d. BRAVO ROMEO ALPHA NOVEMBER SUZANNE.

*This form shall be reproduced locally*.

## 429 PC ASSESSMENT ANSWER KEY

**Multiple Choice (25 points)**

1. Who issues radio station licenses in Canada?

   **a. Industry Canada.**
   b. The Canadian Radio and Television Commission (CRTC).
   c. The Post Office.
   d. The Department of Communications.

2. The penalty for knowingly transmitting a false distress is:

   a. a fine up to $5 000 plus costs.
   **b. a fine up to $5 000 and costs and / or imprisonment for up to 12 months.**
   c. forfeiture of radio equipment.
   d. none of the above.

3. Your station is C-FBRD. The proper method to acknowledge the receipt of a distress message from aircraft C-FADA is:

   a. MAYDAY, C-FBRD, C-FBRD, C-FBRD, RECEIVED MAYDAY, OUT.
   b. MAYDAY, MAYDAY, MAYDAY, THIS IS C-FBRD, C-FBRD, C-FBRD, SILENCE MAYDAY.
   **c. MAYDAY, C-FADA, C-FADA, C-FADA, THIS IS C-FBRD, C-FBRD, C-FBRD, received MAYDAY, OUT.**
   d. MAYDAY, C-FADA, C-FADA, C-FADA, THIS IS C-FBRD, C-FBRD, C-FBRD, MAYDAY RELAY OVER.

4. The order of priority for transmission in the aeronautical service is:

   a. distress, urgency, and communications relating to radio direction findings.
   b. distress, flight safety, and weather warnings.
   c. distress, urgency, and flight safety.
   **d. distress, urgency, and safety communications.**

5. Conversations heard over the air:

   a. must be identified in English only.
   b. must not exceed two minutes in length.
   **c. are to be treated as strictly confidential.**
   d. should be relayed to others who may be interested.

6. Radio equipment eligible for licensing in Canada must be:

   a. DOC type approved or technically acceptable for licensing.
   b. CAS approved.
   c. made in Canada.
   **d. FCC approved.**

7. Prohibited messages or transmissions are:

   a. messages of a personal nature to an addressee.
   b. a transmission with encrypted groups.
   c. mixed plain language and coded groups.
   **d. false distress signals, profane language, and superfluous communications.**

8. The Restricted Radiotelephone Operators Certificate is obtained by:

   a. paying an annual fee.
   **b. demonstrating competence through testing.**
   c. installing type-approved equipment on board.
   d. licencing your radio station.

9. Which of these could be a call sign for an aircraft station?

   a. Mobile three.
   b. Mobil Ted.
   **c. C-GAYE.**
   d. Cessna 150.

10. The signal MAYDAY indicates:

   a. an urgency situation.
   b. a safety message will follow.
   c. normal communications can resume on a restricted basis.
   **d. a distress situation.**

11. The spoken word / expression indicating an urgency situation is:

   **a. PAN PAN.**
   b. MAYDAY.
   c. SOS.
   d. EMERGENCY.

12. The call sign should be sent:

   **a. at least on the initial call.**
   b. only once during the call.
   c. as often as necessary until a reply is received.
   d. as quickly as possible to save air time.

13. Before making a radio transmission, you should:

   a. make a test transmission.
   **b. listen first to ensure that the channel is clear.**
   c. transmit the signal BREAK BREAK.
   d. adjust the gain control to maximum.

14. How can you recognize a signal emitted from an ELT?

   **a. a varying tone heard on 121.5 MHz.**
   b. a steady tone heard on 122.2 MHz.
   c. a pre-recorded message heard on 121.5 MHz.
   d. a pre-recorded message heard on 122.2 MHz.

15. Express $137.25 as it would be transmitted over the air:

   **a. dollars wun tree seven dayseemal too fife.**
   b. wun tree seven decimal too fife dollars.
   c. wun tree seven dollars, too fife cents.
   d. wun hundred thirty seven dayseemal too fife dollars.

16. Which of the following expressions follows proper radiotelephone procedure?

    a. Over and out.
    b. Repeat, over.
    **c. Affirmative, over.**
    d. Can you say again? Out.

17. Your aircraft registration is C-FGAC. How do you call another aircraft whose call sign is C-GBRD?

    a. CHARLIE FOXTROT GOLF ALPHA CHARLIE TO CHARLIE GOLF BRAVO ROMEO DELTA, OVER.
    **b. CHARLIE GOLF BRAVO ROMEO DELTA, THIS IS CHARLIE FOXTROT GOLF ALPHA CHARLIE, OVER.**
    c. FOXTROT GOLF ALPHA CHARLIE, COME IN PLEASE.
    d. FGAC HOW DO YOU READ ME, OVER.

18. Which time zone should be used when working in different time zones:

    a. Eastern Standard Time.
    b. Daylight Savings Time.
    c. Atlantic Standard Time.
    **d. Coordinated Universal Time (UTC).**

19. The term AFFIRMATIVE means:

    a. I request permission to ____.
    b. I agree, but please repeat.
    **c. yes, or permission granted.**
    d. please confirm, I do not understand.

20. What precautions should be taken before making a test transmission?

    a. Count from one to ten and back and ask anybody who is listening for a check.
    **b. Listen to ensure no harmful interference will be caused to on-going communications on the frequency, and then make the test transmission, not exceeding ten seconds.**
    c. Listen to make sure someone is on the air so that you can get a reply to your test.
    d. Request a signal check from any station.

21. What other search and rescue frequency is now commonly used in conjunction with 121.5 MHz?

    **a. 243 MHz.**
    b. 323 MHz.
    c. 500 MHz.
    d. 122.8 MHz.

22. The urgency call is comprised of:

    **a. PAN PAN (spoken three times) THIS IS call sign of station (spoken three times).**
    b. PAN PAN THIS IS call sign of station.
    c. PAN PAN (spoken three times) CALLING ALL STATIONS (spoken three times).
    d. MAYDAY (spoken three times) THIS IS call sign of station (spoken three times).

23. The word used to indicate that the transmission is ended but a response is expected, is:

    **a. OVER.**
    b. GO AHEAD.
    c. ROGER, OVER AND OUT.
    d. YOUR TURN.

24. To acknowledge a transmission you should say:

    a. 10-4.
    b. I RECEIVE.
    c. AFFIRMATIVE.
    **d. ROGER.**

25. Using the ITU Phonetic Alphabet, how would you spell the word BRAINS:

    a. BOSTON ROGER APPLE IDA NANCY SUGAR.
    **b. BRAVO ROMEO ALPHA INDIA NOVEMBER SIERRA.**
    c. BAKER ROBERTY ABLE ITALY NEW YORK SUSAN.
    d. BRAVO ROMEO ALPHA NOVEMBER SUZANNE.

**429 PC ASSESSMENT RE-TEST**

Cadet's Name: _____ Date: _____

**Multiple Choice (25 points)**

1. A fine not exceeding $5 000 and costs and / or imprisonment for twelve months is given for:

   a. doing radio checks.
   b. using 10 code.
   c. not having a radio log.
   d. transmitting a false or fraudulent distress signal.

2. What special care should be observed when handling and using a microphone?

   a. Keep the microphone at the recommended distance as suggested by the operation manual.
   b. Keep the microphone very close to your mouth.
   c. Keep the microphone at least 20 cm (8 inches) from your mouth.
   d. Talk slowly.

3. What word or expression would be used to indicate a transmission error has been made?

   a. CORRECTION.
   b. MISTAKE.
   c. THAT IS WRONG.
   d. None of the above.

4. The signal PAN PAN spoken three times indicates:

   a. a safety situation.
   b. a distress situation.
   c. an urgency situation.
   d. an imposition of silence.

5. In order of priority, the two most important types of radio transmissions are:

   a. distress and government communications.
   b. distress and urgency communications.
   c. urgency and direction finding communications.
   d. distress and safety communications.

6. The maximum penalty for establishing a radio station without a radio licence is:

   a. a $50 fine.
   b. a $500 fine and up to six months imprisonment.
   c. a $5 000 fine and up to six months imprisonment.
   d. a $5 000 fine and up to 12 months imprisonment.

7. Who issues radio station licenses in Canada?

   a. Industry Canada.
   b. The Canadian Radio and Television Commission (CRTC).
   c. The Post Office.
   d. The Department of Communications.

8. The word used to tell another station to proceed with their message is:

   a. OVER.
   b. READ BACK.
   c. GO AHEAD.
   d. SAY AGAIN.

9. The term SAY AGAIN means:

   a. please repeat your last transmission.
   b. unreadable, try again later.
   c. error in transmission, please correct.
   d. I will relay the message for you.

10. Which of the following expressions follows proper radiotelephone procedures?

   a. OVER AND OUT.
   b. REPEAT, OVER.
   c. CAN YOU SAY AGAIN? OUT.
   d. AFFIRMATIVE, OVER.

11. The frequency 121.5 MHz would be spoken as:

   a. one twenty one five.
   b. wun too wun dayseemal fife.
   c. wun too wun fife.
   d. one twenty one point five.

12. What other search and rescue frequency is commonly used in conjunction with 121.5 MHz?

   a. 323 MHz.
   b. 243 MHz.
   c. 500 MHz.
   d. 122.8 MHz.

13. In the case of normal communication between a base station and a mobile station:

   a. the mobile station cannot call the base first.
   b. the mobile station has control of communications.
   c. whichever station makes the first call has control of communications.
   d. the base station has control of communications.

14. On what radio frequency do you initially make an emergency distress call?

   a. the frequency on which you last flew.
   b. the ATIS frequency.
   c. the current frequency.
   d. 121.5 MHz.

15. In the case of distress who controls communications?

   a. The aeronautical ground or base station.
   b. The aircraft in distress unless it hands over control to another station.
   c. No station controls communications.
   d. The nearest station.

16. The time of 1:30 AM expressed in the 24-hour system would be:

    a. ZERO WUN TREE ZERO.
    b. WUN TREE TREE ZERO.
    c. THIRTEEN THIRTY HOURS.
    d. ZERO WUN THIRTY HOURS.

17. What is the aeronautical distress frequency?

    a. 122.80 MHz.
    b. 126.70 MHz.
    c. 121.5 MHz.
    d. 122.90 MHz.

18. Why should you make it a practice to monitor 121.5 MHz just after takeoff or landing?

    a. To make sure your receiver is working.
    b. To listen for downed aircraft in the vicinity of the airport.
    c. To listen for any aircraft safety advisories.
    d. To make sure that the ELT in your aircraft has not accidentally triggered during takeoff or landing.

19. The signal MAYDAY indicates:

    a. a distress situation.
    b. an urgency situation.
    c. a safety message will follow.
    d. normal communication can resume on a restricted basis.

20. Any person aware of a radio communication transmitted other than a broadcasting station or an amateur station is bound by the provisions of the Radiocommunication Act to:

    a. not to make a tape of such communication.
    b. report the use of the frequency to the nearest Department of Communication District Office.
    c. enter the details of the intercept in the station log.
    d. preserve the secrecy of correspondence.

21. The distinctive call sign issued to radio stations should be used:

    a. every three minutes.
    b. during poor conditions.
    c. only during emergency situations.
    d. at least when initial contact is established.

22. The figure 600 would be transmitted as:

    a. SIX HUNDRED.
    b. SIX OH OH.
    c. SIX ZERO ZERO.
    d. none of the above.

23. The order of priority for transmission in the aeronautical service is:

    a. distress, flight safety, and weather warnings.
    b. distress, urgency, and communications relating to radio direction findings.
    c. distress, urgency, and flight safety.
    d. distress, urgency, and safety communications.

24. Signal checks should:

    a. not last more than 10 seconds.
    b. be exchanged on Channel 16.
    c. last as long as the operator wishes.
    d. Both B and C.

25. Using the ITU Phonetic Alphabet, how would you spell the word BRAINS:

    a. BOSTON ROGER APPLE IDA NANCY SUGAR.
    b. BRAVO ROMEO ALPHA INDIA NOVEMBER SIERRA.
    c. BAKER ROBERTY ABLE ITALY NEW YORK SUSAN.
    d. BRAVO ROMEO ALPHA NOVEMBER SUZANNE.

*This form shall be reproduced locally*.

## 429 PC ASSESSMENT RE-TEST ANSWER KEY

**Multiple Choice (25 points)**

1. A fine not exceeding $5 000 and costs and / or imprisonment for twelve months is given for:

   a. doing radio checks.
   b. using 10 code.
   c. not having a radio log.
   **d. transmitting a false or fraudulent distress signal.**

2. What special care should be observed when handling and using a microphone?

   a. Keep the microphone at the recommended distance as suggested by the operation manual.
   b. Keep the microphone very close to your mouth.
   c. Keep the microphone at least 20 cm (8 inches) from your mouth.
   **d. Talk slow.**

3. What word or expression would be used to indicate a transmission error has been made?

   **a. CORRECTION.**
   b. MISTAKE.
   c. THAT IS WRONG.
   d. none of the above.

4. The signal PAN PAN spoken three times indicates:

   a. a safety situation.
   b. a distress situation.
   **c. an urgency situation.**
   d. an imposition of silence.

5. In order of priority, the two most important types of radio transmissions are:

   a. distress and government communications.
   **b. distress and urgency communications.**
   c. urgency and direction finding communications.
   d. distress and safety communications.

6. The maximum penalty for establishing a radio station without a radio licence is:

   a. a $50 fine.
   b. a $500 fine and up to six months imprisonment.
   c. a $5 000 fine and up to six months imprisonment.
   **d. a $5 000 fine and up to 12 months imprisonment.**

7. Who issues radio station licenses in Canada?

   **a. Industry Canada.**
   b. The Canadian Radio and Television Commission (CRTC).
   c. The Post Office.
   d. The Department of Communications.

8. The word used to tell another station to proceed with their message is:

   a. OVER.
   b. READ BACK.
   **c. GO AHEAD.**
   d. SAY AGAIN.

9. The term SAY AGAIN means:

   **a. please repeat your last transmission.**
   b. unreadable, try again later.
   c. error in transmission, please correct.
   d. I will relay the message for you.

10. Which of the following expressions follows proper radiotelephone procedures?

    a. OVER AND OUT.
    b. REPEAT, OVER.
    c. CAN YOU SAY AGAIN? OUT.
    **d. AFFIRMATIVE, OVER.**

11. The frequency 121.5 MHz would be spoken as:

    a. one twenty one five.
    **b. wun too wun dayseemal fife.**
    c. wun too wun fife.
    d. one twenty one point five.

12. What other search and rescue frequency is commonly used in conjunction with 121.5 MHz?

    a. 323 MHz.
    **b. 243 MHz.**
    c. 500 MHz.
    d. 122.8 MHz.

13. In the case of normal communication between a base station and a mobile station:

    a. the mobile station cannot call the base first.
    b. the mobile station has control of communications.
    c. whichever station makes the first call has control of communications.
    **d. the base station has control of communications.**

14. On what radio frequency do you initially make an emergency distress call?

    a. the frequency on which you last flew.
    b. the ATIS frequency.
    **c. the current frequency.**
    d. 121.5 MHz.

15. In the case of distress who controls communications?

    a. The aeronautical ground or base station.
    **b. The aircraft in distress unless it hands over control to another station.**
    c. No station controls communications.
    d. The nearest station.

16. The time of 1:30 AM expressed in the 24-hour system would be:

    **a. ZERO WUN TREE ZERO.**
    b. WUN TREE TREE ZERO.
    c. THIRTEEN THIRTY HOURS.
    d. ZERO WUN THIRTY HOURS.

17. What is the aeronautical distress frequency?

    a. 122.80 MHz.
    b. 126.70 MHz.
    **c. 121.5 MHz.**
    d. 122.90 MHz.

18. Why should you make it a practice to monitor 121.5 MHz just after takeoff or landing?

    a. To make sure your receiver is working.
    b. To listen for downed aircraft in the vicinity of the airport.
    c. To listen for any aircraft safety advisories.
    **d. To make sure that the ELT in your aircraft has not accidentally triggered during takeoff or landing.**

19. The signal MAYDAY indicates:

    **a. a distress situation.**
    b. an urgency situation.
    c. a safety message will follow.
    d. normal communication can resume on a restricted basis.

20. Any person aware of a radio communication transmitted other than a broadcasting station or an amateur station is bound by the provisions of the Radiocommunication Act to:

    a. not to make a tape of such communication.
    b. report the use of the frequency to the nearest Department of Communication District Office.
    c. enter the details of the intercept in the station log.
    **d. preserve the secrecy of correspondence.**

21. The distinctive call sign issued to radio stations should be used:

    a. every three minutes.
    b. during poor conditions.
    c. only during emergency situations.
    **d. at least when initial contact is established.**

22. The figure 600 would be transmitted as:

    a. SIX HUNDRED.
    b. SIX OH OH.
    **c. SIX ZERO ZERO.**
    d. none of the above.

23. The order of priority for transmission in the aeronautical service is:

    a. distress, flight safety, and weather warnings.
    b. distress, urgency, and communications relating to radio direction findings.
    c. distress, urgency, and flight safety.
    **d. distress, urgency, and safety communications.**

24. Signal checks should:

    **a. not last more than 10 seconds.**
    b. be exchanged on Channel 16.
    c. last as long as the operator wishes.
    d. Both B and C.

25. Using the ITU Phonetic Alphabet, how would you spell the word BRAINS:

    a. BOSTON ROGER APPLE IDA NANCY SUGAR.
    **b. BRAVO ROMEO ALPHA INDIA NOVEMBER SIERRA.**
    c. BAKER ROBERTY ABLE ITALY NEW YORK SUSAN.
    d. BRAVO ROMEO ALPHA NOVEMBER SUZANNE.

# ANNEX B, APPENDIX 6
# AVIATION SUBJECTS–COMBINED ASSESSMENT PC
# ASSESSMENT INSTRUCTIONS

## PREPARATION

### PRE-ASSESSMENT INSTRUCTIONS

Review the assessment plan, assessment instructions and Aviation Subjects–Combined Assessment PC and become familiar with the material prior to conducting the assessment.

Photocopy the Assessment Tool for each cadet.

### PRE-ASSESSMENT ASSIGNMENT

Nil.

### ASSESSMENT METHOD

A selected response assessment was chosen to assess the cadet's knowledge of the principles of flight, aero engines, meteorology and navigation.

## CONDUCT OF ASSESSMENT

### PURPOSE

The purpose of this PC is to assess the cadet’s knowledge of aviation subjects including principles of flight, aero engines, meteorology, and navigation.

### RESOURCES

- Aviation Subjects–Combined Assessment PC, and
- Pen / pencil.

### ASSESSMENT ACTIVITY LAYOUT

This assessment shall be conducted in a classroom. Desks shall be separated as much as possible.

Criteria for assessing the cadet's knowledge are:

- Incomplete. Less than 60 percent.
- Completed with difficulty. 60–74 percent.
- Completed without difficulty. 75–89 percent.
- Exceeded standard. 90–100 percent.

### ASSESSMENT ACTIVITY INSTRUCTIONS

1. Distribute a pen / pencil to each cadet.
2. Distribute the Assessment Tool to each cadet face up and instruct them to begin only when told to do so.
3. Explain the structure of the Assessment Tool.

4. Have the cadets write their names on the top of the Assessment Tool.

5. Have the cadets write the Assessment Tool.

6. Give the cadets a 10-minute warning.

7. Give the cadets a 5-minute warning.

8. Collect the Assessment Tools.

## POST ASSESSMENT INSTRUCTIONS

### RECORDING ASSESSMENT RESULTS

The overall rating for Aviation Subjects–Combined Assessment PC will be recorded on the Proficiency Level Four Qualification Record located at Chapter 3, Annex C.

### PROVIDING ASSESSMENT FEEDBACK

Inform each cadet of their grade. No debriefing is required for those cadets who score 60 percent or more on the Assessment Tool. Cadets who score less than 60 percent will be debriefed individually. Those cadets are required to write a re-test. Any cadets who require a re-test must be tutored prior to the re-test. The content of the tutoring session will vary depending on the cadet. The aim of this session is to review the mistakes made in the original assessment and to prepare the cadet for the re-test.

**AVIATION SUBJECTS–COMBINED ASSESSMENT PC**

Cadet's Name: _____ Date: _____

***Part A–Multiple Choice (43 points)***

1. The very thin layer of air lying over the surface of the wing is called the _____ layer.

   a. transition.
   b. boundary.
   c. turbulent.
   d. laminar.

2. Conventional airfoils are generally the thickest at _____ percent of the chord.

   a. 15.
   b. 25.
   c. 50.
   d. 65.

3. Laminar flow airfoils reduce drag by maintaining the _____ flow of air throughout a greater percentage of the _____.

   a. turbulent, chord.
   b. turbulent, span.
   c. laminar, chord.
   d. laminar, span.

4. Aspect ratio is calculated by:

   a. dividing the span by the average chord.
   b. dividing the average chord by the span.
   c. dividing the weight by the coefficient of lift.
   d. dividing the weight by the coefficient of drag.

5. Decreasing the angle of incidence at the wing tip is called:

   a. wash-in.
   b. wash-up.
   c. wash-out.
   d. wash-off.

6. Which of the following is not a wing-tip modification designed to increase lift / reduce drag?

   a. Wing-tip fuel tanks.
   b. Winglets.
   c. Drooping the wing tips.
   d. Wing fences.

7. Auxiliary airfoils that move out in front of the leading edge at high angles of attack are called:

   a. slats.
   b. flaps.
   c. wing fences.
   d. slots.

8. Passages built into the wing that affect the airflow in the same way as slats are called:

   a. slats.
   b. flaps.
   c. wing fences.
   d. slots.

9. The curvature of an airfoil is also called:

   a. chord.
   b. span.
   c. rib.
   d. camber.

10. What colour-coded arcs are found on the tachometer?

   a. Green, orange, red.
   b. Blue, red, green.
   c. Green, yellow, red.
   d. Black, white, red.

11. The altimeter is connected to both the pitot pressure source and the static pressure port.

   a. True.
   b. False.

12. Density errors in the ASI are caused by:

   a. an increase in the temperature of the air as the density increases.
   b. a decrease in the temperature of the air as the altitude decreases.
   c. blockages of the pitot static system due to the density of the air.
   d. a decrease in the density of the air as the altitude increases.

13. The CAS corrected for the compressibility factor is the:

   a. CAS.
   b. IAS.
   c. TAS.
   d. EAS.

14. When flying into an area with a relatively lower pressure, if the altimeter setting is not corrected, the altimeter will read:

   a. lower than the actual altitude.
   b. higher than the actual altitude.
   c. the correct altitude, provided that the pilot maintains a constant airspeed.
   d. the correct altitude, provided that the pilot maintains a constant angle of bank.

15. Density altitude is:

   a. the altitude displayed on the altimeter when it is set to 29.92 inches of mercury.
   b. the actual height above Earth's surface.
   c. the pressure altitude corrected for temperature.
   d. the pressure altitude corrected for absolute errors.

16. The VSI measures the rate of change of the static pressure and indicates if the altitude is increasing or decreasing.

    a. True.
    b. False.

17. Precession is:

    a. the tendency of a rotating body, when a force is applied perpendicular to its plane of rotation, to turn in the direction of its rotation 90 degrees to its axis and take up a new plane of rotation parallel to the force applied.
    b. the tendency of a rotating object to remain in its plane of rotation.
    c. the tendency of a rotating body, when a force is applied parallel to its plane of rotation, to turn in the direction of its rotation 90 degrees to its axis and take up a new plane of rotation perpendicular to the force applied.
    d. the tendency of a rotating object to move from its plane of rotation.

18. The Mach number is calculated by:

    a. dividing the speed of sound by the airspeed.
    b. multiplying the speed of sound by the airspeed.
    c. dividing the airspeed by the speed of sound.
    d. multiplying the airspeed by the speed of sound and adding the inverse of the Mach index.

19. What does the fuel selector valve, used by the pilot, do?

    a. Transfer fuel.
    b. Select desired fuel tank to draw fuel.
    c. Shut off the flow of fuel from the tanks.
    d. Both B and C.

20. Forward movement of the throttle closes the throttle valve, which decreases the fuel / air mixture, and increases the power being produced by the engine.

    a. True.
    b. False.

21. Which two gauges measure the properties of the engine oil?

    a. Oil pressure and cylinder head temperature gauges.
    b. Oil temperature and outside air temperature gauges.
    c. Oil pressure and oil temperature gauges.
    d. Oil temperature and oil viscosity gauges.

22. What is maintained throughout most of the diameter of the propeller by means of the variation in airfoil sections and the angle of attack?

    a. Pitch.
    b. Drag.
    c. Thrust.
    d. Dihedral.

23. What is the distance a propeller travels forward in one revolution?

    a. Pitch.
    b. Drag.
    c. Thrust.
    d. Dihedral.

24. What reading will register on the manifold pressure gauge when the engine is not running?

    a. Engine power.
    b. Atmospheric pressure.
    c. Air temperature.
    d. Compression pressure.

25. What occurs to an engine as the altitude increases and the air becomes less dense?

    a. Power increases.
    b. Power remains stable.
    c. Power decreases.
    d. Engine stops.

26. What effect does surface friction have on winds?

    a. None.
    b. It causes winds to back and veer.
    c. It causes an increase in wind speeds.
    d. It causes lower wind speeds than would be expected from the pressure gradient.

27. An air mass is a large section of the troposphere with uniform properties of _____ and _____ in the _____.

    a. temperature, pressure, horizontal.
    b. pressure, moisture, horizontal.
    c. temperature, moisture, horizontal.
    d. temperature, moisture, vertical.

28. A katabatic wind:

    a. is the term for down slope winds flowing from high elevations down the slopes to valleys below.
    b. is the term for up slope winds flowing from valleys up the slopes to high elevations above.
    c. is the term for winds flowing from land to large bodies of water.
    d. is the term for winds flowing from large bodies of water to land.

29. An anabatic wind:

    a. is the term for down slope winds flowing from high elevations down the slopes to valleys below.
    b. is the term for up slope winds flowing from valleys up the slopes to high elevations above.
    c. is the term for winds flowing from land to large bodies of water.
    d. is the term for winds flowing from large bodies of water to land.

30. A gust is:

    a. a gradual change of wind direction associated with a change in altitude.
    b. a rapid and irregular change of wind speed.
    c. a regular and predictable change of wind speed.
    d. not considered important when learning about meteorology.

31. The three main factors that determine the weather in an air mass are:

    a. the moisture content, the temperature, and the stability of the air.
    b. the presence of condensation nuclei, the ambient pressure, and the altitude of the isothermal layer.
    c. the moisture content, the cooling process, and the altitude of the isothermal layer.
    d. the moisture content, the cooling process, and the stability of the air.

32. In stable air:

    a. stratus cloud and poor visibility are common.
    b. cumulus cloud and good visibility are common.

33. In unstable air:

    a. stratus cloud and poor visibility are common.
    b. cumulus cloud and good visibility are common.

34. A _____ air mass is more dense and therefore _____, undercutting a _____ air mass which will _____ over the cold air.

    a. warm, sinks, cold, ascend.
    b. cold, sinks, warm, ascend.
    c. cold, ascends, warm, sink.
    d. warm, ascends, cold, sink.

35. The shortest distance between two points on the surface of the Earth is represented by:

    a. a rhumb line.
    b. true heading.
    c. magnetic meridian.
    d. a great circle.

36. The angle between true heading and magnetic heading is:

    a. variation.
    b. magnetic dip.
    c. deviation.
    d. turning error.

37. A compass heading is:

    a. magnetic heading minus west deviation.
    b. magnetic heading plus west deviation.
    c. true heading minus west deviation.
    d. true heading plus west deviation.

38. Lines drawn on a chart joining places having the same variation are:

    a. isobaric lines.
    b. isogonic lines.
    c. agonic lines.
    d. rhumb lines.

39. On east and west headings, deceleration causes the compass to register a turn toward:

    a. north.
    b. south.
    c. east.
    d. west.

40. Meridians of longitude are:

    a. measured from 0–90 degrees east and west of the prime meridian.
    b. semi-great circles joining the geographic poles of the Earth.
    c. measured in hours, minutes, and seconds.
    d. all of the above.

41. Parallels of latitude are:

    a. circles on the Earth's surface that lie parallel to the equator.
    b. measured from 0–90 degrees north and south of the equator.
    c. measured in degrees, minutes, and seconds.
    d. all of the above.

42. The advantage of the rhumb line route is:

    a. it is the shortest distance between two points on the surface of the Earth.
    b. it can be followed at higher altitudes than great circle routes.
    c. the direction is constant, allowing a navigator to follow a constant heading.
    d. it is the most fuel-efficient route, especially when travelling from east to west.

43. Lines joining places of zero magnetic variation are:

    a. agonic lines.
    b. isogonic lines.
    c. isobar lines.
    d. lines of longitude.

***Part B–Diagrams (7 points)***

1. Label the following parts on the diagram below.

   a. Left tank
   b. Right tank
   c. Vent
   d. Selector valve
   e. Primer
   f. Strainer
   g. Carburetor

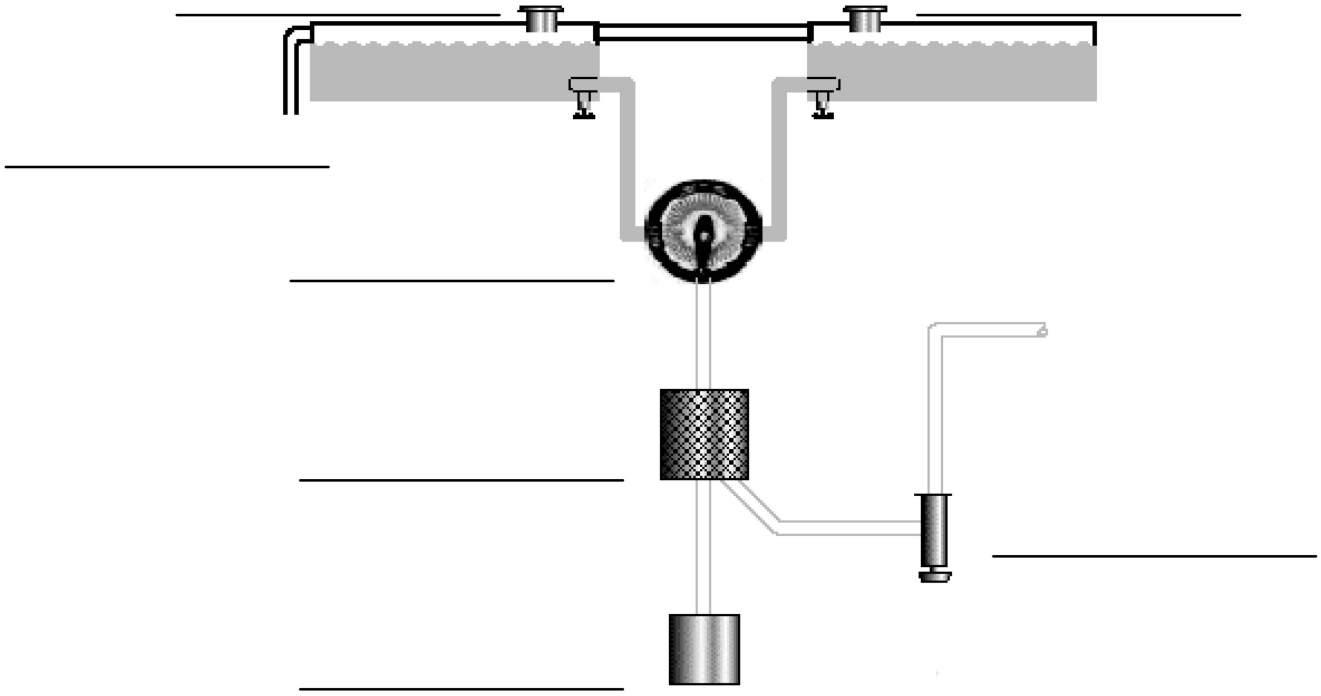

*This form shall be reproduced locally*.

**AVIATION SUBJECTS–COMBINED ASSESSMENT PC**
**ANSWER KEY**

***Part A–Multiple Choice (43 points)***

1. The very thin layer of air lying over the surface of the wing is called the _____ layer.

   a. transition.
   **b. boundary.**
   c. turbulent.
   d. laminar.

2. Conventional airfoils are generally the thickest at _____ percent of the chord.

   a. 15.
   **b. 25.**
   c. 50.
   d. 65.

3. Laminar flow airfoils reduce drag by maintaining the _____ flow of air throughout a greater percentage of the _____.

   a. turbulent, chord.
   b. turbulent, span.
   **c. laminar, chord.**
   d. laminar, span.

4. Aspect ratio is calculated by:

   **a. dividing the span by the average chord.**
   b. dividing the average chord by the span.
   c. dividing the weight by the coefficient of lift.
   d. dividing the weight by the coefficient of drag.

5. Decreasing the angle of incidence at the wing tip is called:

   a. wash-in.
   b. wash-up.
   **c. wash-out.**
   d. wash-off.

6. Which of the following is not a wing-tip modification designed to increase lift / reduce drag?

   a. Wing-tip fuel tanks.
   b. Winglets.
   c. Drooping the wing tips.
   **d. Wing fences.**

7. Auxiliary airfoils that move out in front of the leading edge at high angles of attack are called:

   **a. slats.**
   b. flaps.
   c. wing fences.
   d. slots.

8. Passages built into the wing that affect the airflow in the same way as slats are called:

   a. slats.
   b. flaps.
   c. wing fences.
   **d. slots.**

9. The curvature of an airfoil is also called:

   a. chord.
   b. span.
   c. rib.
   **d. camber.**

10. What colour-coded arcs are found on the tachometer?

    a. Green, orange, red.
    b. Blue, red, green.
    **c. Green, yellow, red.**
    d. Black, white, red.

11. The altimeter is connected to both the pitot pressure source and the static pressure port.

    a. True.
    **b. False.**

12. Density errors in the ASI are caused by:

    a. an increase in the temperature of the air as the density increases.
    b. a decrease in the temperature of the air as the altitude decreases.
    c. blockages of the pitot static system due to the density of the air.
    **d. a decrease in the density of the air as the altitude increases.**

13. The CAS corrected for the compressibility factor is the:

    a. CAS.
    b. IAS.
    c. TAS.
    **d. EAS.**

14. When flying into an area with a relatively lower pressure, if the altimeter setting is not corrected, the altimeter will read:

    a. lower than the actual altitude.
    **b. higher than the actual altitude.**
    c. the correct altitude, provided that the pilot maintains a constant airspeed.
    d. the correct altitude, provided that the pilot maintains a constant angle of bank.

15. Density altitude is:

    a. the altitude displayed on the altimeter when it is set to 29.92 inches of mercury.
    b. the actual height above Earth's surface.
    **c. the pressure altitude corrected for temperature.**
    d. the pressure altitude corrected for absolute errors.

16. The VSI measures the rate of change of the static pressure and indicates if the altitude is increasing or decreasing.

    **a. True.**
    b. False.

17. Precession is:

    **a. the tendency of a rotating body, when a force is applied perpendicular to its plane of rotation, to turn in the direction of its rotation 90 degrees to its axis and take up a new plane of rotation parallel to the force applied.**
    b. the tendency of a rotating object to remain in its plane of rotation.
    c. the tendency of a rotating body, when a force is applied parallel to its plane of rotation, to turn in the direction of its rotation 90 degrees to its axis and take up a new plane of rotation perpendicular to the force applied.
    d. the tendency of a rotating object to move from its plane of rotation.

18. The Mach number is calculated by:

    a. dividing the speed of sound by the airspeed.
    b. multiplying the speed of sound by the airspeed.
    **c. dividing the airspeed by the speed of sound.**
    d. multiplying the airspeed by the speed of sound and adding the inverse of the Mach index.

19. What does the fuel selector valve, used by the pilot, do?

    a. Transfer fuel.
    b. Select desired fuel tank to draw fuel.
    c. Shut off the flow of fuel from the tanks.
    **d. Both B and C.**

20. Forward movement of the throttle closes the throttle valve, which decreases the fuel / air mixture, and increases the power being produced by the engine.

    a. True.
    **b. False.**

21. Which two gauges measure the properties of the engine oil?

    a. Oil pressure and cylinder head temperature gauges.
    b. Oil temperature and outside air temperature gauges.
    **c. Oil pressure and oil temperature gauges.**
    d. Oil temperature and oil viscosity gauges.

22. What is maintained throughout most of the diameter of the propeller by means of the variation in airfoil sections and the angle of attack?

    a. Pitch.
    b. Drag.
    **c. Thrust.**
    d. Dihedral.

23. What is the distance a propeller travels forward in one revolution?

    **a. Pitch.**
    b. Drag.
    c. Thrust.
    d. Dihedral.

24. What reading will register on the manifold pressure gauge when the engine is not running?

    a. Engine power.
    **b. Atmospheric pressure.**
    c. Air temperature.
    d. Compression pressure.

25. What occurs to an engine as the altitude increases and the air becomes less dense?

    a. Power increases.
    b. Power remains stable.
    **c. Power decreases.**
    d. Engine stops.

26. What effect does surface friction have on winds?

    a. None.
    b. It causes winds to back and veer.
    c. It causes an increase in wind speeds.
    **d. It causes lower wind speeds than would be expected from the pressure gradient.**

27. An air mass is a large section of the troposphere with uniform properties of _____ and _____ in the _____.

    a. temperature, pressure, horizontal
    b. pressure, moisture, horizontal
    **c. temperature, moisture, horizontal**
    d. temperature, moisture, vertical

28. A katabatic wind:

    **a. is the term for down slope winds flowing from high elevations down the slopes to valleys below.**
    b. is the term for up slope winds flowing from valleys up the slopes to high elevations above.
    c. is the term for winds flowing from land to large bodies of water.
    d. is the term for winds flowing from large bodies of water to land.

29. An anabatic wind:

    a. is the term for down slope winds flowing from high elevations down the slopes to valleys below.
    **b. is the term for up slope winds flowing from valleys up the slopes to high elevations above.**
    c. is the term for winds flowing from land to large bodies of water.
    d. is the term for winds flowing from large bodies of water to land.

30. A gust is:

    a. a gradual change of wind direction associated with a change in altitude.
    **b. a rapid and irregular change of wind speed.**
    c. a regular and predictable change of wind speed.
    d. not considered important when learning about meteorology.

31. The three main factors that determine the weather in an air mass are:

    a. the moisture content, the temperature, and the stability of the air.
    b. the presence of condensation nuclei, the ambient pressure, and the altitude of the isothermal layer.
    c. the moisture content, the cooling process, and the altitude of the isothermal layer.
    **d. the moisture content, the cooling process, and the stability of the air.**

32. In stable air:

    **a. stratus cloud and poor visibility are common.**
    b. cumulus cloud and good visibility are common.

33. In unstable air:

    a. stratus cloud and poor visibility are common.
    **b. cumulus cloud and good visibility are common.**

34. A _____ air mass is more dense and therefore _____, undercutting a _____ air mass which will _____ over the cold air.

    a. warm, sinks, cold, ascend.
    **b. cold, sinks, warm, ascend.**
    c. cold, ascends, warm, sink.
    d. warm, ascends, cold, sink.

35. The shortest distance between two points on the surface of the Earth is represented by:

    a. a rhumb line.
    b. true heading.
    c. magnetic meridian.
    **d. a great circle.**

36. The angle between true heading and magnetic heading is:

    **a. variation.**
    b. magnetic dip.
    c. deviation.
    d. turning error.

37. A compass heading is:

    a. magnetic heading minus west deviation.
    **b. magnetic heading plus west deviation.**
    c. true heading minus west deviation.
    d. true heading plus west deviation.

38. Lines drawn on a chart joining places having the same variation are:

    a. isobaric lines.
    **b. isogonic lines.**
    c. agonic lines.
    d. rhumb lines.

39. On east and west headings, deceleration causes the compass to register a turn toward:

    a. north.
    **b. south.**
    c. east.
    d. west.

40. Meridians of longitude are:

    a. measured from 0–90 degrees east and west of the prime meridian.
    **b. semi-great circles joining the geographic poles of the Earth.**
    c. measured in hours, minutes, and seconds.
    d. all of the above.

41. Parallels of latitude are:

    a. circles on the Earth's surface that lie parallel to the equator.
    b. measured from 0–90 degrees north and south of the equator.
    c. measured in degrees, minutes, and seconds.
    **d. all of the above.**

42. The advantage of the rhumb line route is:

    a. it is the shortest distance between two points on the surface of the Earth.
    b. it can be followed at higher altitudes than great circle routes.
    **c. the direction is constant, allowing a navigator to follow a constant heading.**
    d. it is the most fuel-efficient route, especially when travelling from east to west.

43. Lines joining places of zero magnetic variation are:

    **a. agonic lines.**
    b. isogonic lines.
    c. isobar lines.
    d. lines of longitude.

***Part B–Diagrams (7 points)***

1. Label the following parts on the diagram below.

    a. Left tank

    b. Right tank

    c. Vent

    d. Selector valve

    e. Primer

    f. Strainer

    g. Carburetor

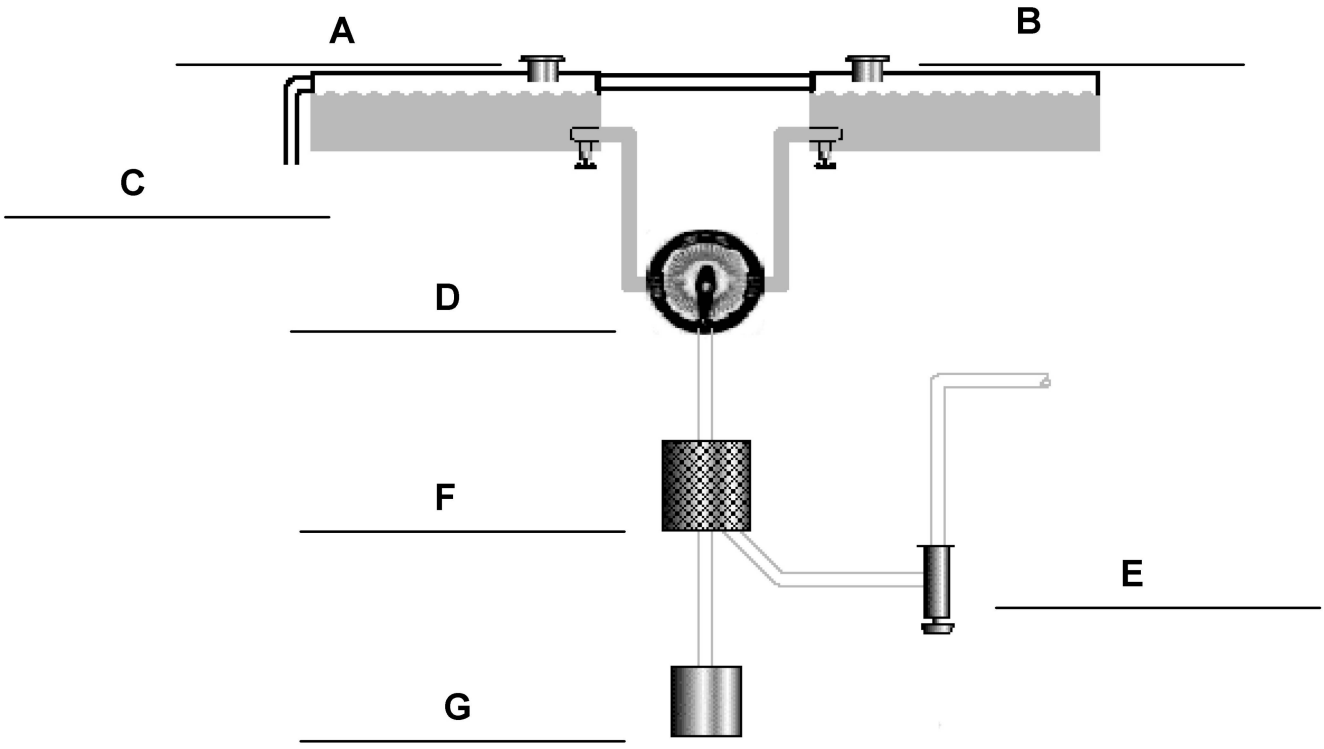

**AVIATION SUBJECTS–COMBINED ASSESSMENT PC REWRITE**

Cadet's Name: _____ Date: _____

***Part A–Multiple Choice (45 points)***

1. Laminar airfoils are generally the thickest at _____ percent of the chord.

   a. 15.
   b. 25.
   c. 50.
   d. 65.

2. Laminar flow airfoils reduce drag by maintaining the _____ flow of air throughout a greater percentage of the _____.

   a. turbulent, chord.
   b. turbulent, span.
   c. laminar, chord.
   d. laminar, span.

3. Aspect ratio is calculated by:

   a. dividing the span by the average chord.
   b. dividing the average chord by the span.
   c. dividing the weight by the coefficient of lift.
   d. dividing the weight by the coefficient of drag.

4. Increasing the angle of incidence at the wing tip is called:

   a. wash-in.
   b. wash-up.
   c. wash-out.
   d. wash-off.

5. Which of the following is not a wing-tip modification designed to increase lift / reduce drag?

   a. Wing-tip fuel tanks.
   b. Winglets.
   c. Drooping the wing tips.
   d. Wing fences.

6. Auxiliary airfoils that move out in front of the leading edge at high angles of attack are called:

   a. slats.
   b. flaps.
   c. wing fences.
   d. slots.

7. Passages built into the wing that affect the airflow in the same way as slats are called:

   a. slats.
   b. flaps.
   c. wing fences.
   d. slots.

8. In addition to creating lift, flaps also create:

   a. thrust.
   b. weight.
   c. trim.
   d. drag.

9. The curvature of an airfoil is also called:

   a. chord.
   b. span.
   c. rib.
   d. camber.

10. Pitot pressure is the atmospheric pressure outside the aircraft, not affected by turbulence or motion.

   a. True.
   b. False.

11. The ASI is connected to both the pitot pressure source and the static pressure port.

   a. True.
   b. False.

12. Density errors in the ASI are caused by:

   a. an increase in the temperature of the air as the density increases.
   b. a decrease in the temperature of the air as the altitude decreases.
   c. blockages of the pitot static system due to the density of the air.
   d. a decrease in the density of the air as the altitude increases.

13. The IAS corrected for instrument and position errors is the:

   a. CAS.
   b. IAS.
   c. TAS.
   d. EAS.

14. When flying into an area with a relatively higher pressure, if the altimeter setting is not corrected, the altimeter will read:

   a. lower than the actual altitude.
   b. higher than the actual altitude.
   c. the correct altitude, provided that the pilot maintains a constant airspeed.
   d. the correct altitude, provided that the pilot maintains a constant angle of bank.

15. Density altitude is:

   a. the altitude displayed on the altimeter when it is set to 29.92 inches of mercury.
   b. the actual height above Earth's surface.
   c. the pressure altitude corrected for temperature.
   d. the pressure altitude corrected for absolute errors.

16. The VSI measures the rate of change of the pitot pressure and indicates if the altitude is increasing or decreasing.

   a. True.
   b. False.

17. Gyroscopic inertia is also known as:

    a. precession.
    b. rigidity in space.
    c. fluidity in space.
    d. rotation.

18. Precession is:

    a. the tendency of a rotating body, when a force is applied perpendicular to its plane of rotation, to turn in the direction of its rotation 90 degrees to its axis and take up a new plane of rotation parallel to the force applied.
    b. the tendency of a rotating object to remain in its plane of rotation.
    c. the tendency of a rotating body, when a force is applied parallel to its plane of rotation, to turn in the direction of its rotation 90 degrees to its axis and take up a new plane of rotation perpendicular to the force applied.
    d. the tendency of a rotating object to move from its plane of rotation.

19. Where should the fuel tank be positioned in a gravity feed system?

    a. Above the carburetor.
    b. Below the carburetor.
    c. In-line with the carburetor.
    d. Below the centre of gravity.

20. What does the fuel selector valve, used by the pilot, do?

    a. Transfer fuel.
    b. Select desired fuel tank to draw fuel.
    c. Shut off the flow of fuel from the tanks.
    d. Both B and C.

21. Forward movement of the throttle opens the throttle valve, which increases the fuel / air mixture, and increases the power being produced by the engine.

    a. True.
    b. False.

22. Which two gauges measure the properties of the engine oil?

    a. Oil pressure and cylinder head temperature gauges.
    b. Oil temperature and outside air temperature gauges.
    c. Oil pressure and oil temperature gauges.
    d. Oil temperature and oil viscosity gauges.

23. What is maintained throughout most of the diameter of the propeller by means of the variation in airfoil sections and the angle of attack?

    a. Pitch.
    b. Drag.
    c. Thrust.
    d. Dihedral.

24. What is the distance a propeller travels forward in one revolution?

    a. Pitch.
    b. Drag.
    c. Thrust.
    d. Dihedral.

25. What colour-coded arcs are found on the tachometer?

    a. Green, orange, red.
    b. Blue, red, green.
    c. Green, yellow, red.
    d. Black, white, red.

26. What reading will register on the manifold pressure gauge when the engine is not running?

    a. Engine power.
    b. Atmospheric pressure.
    c. Air temperature.
    d. Compression pressure.

27. What occurs to an engine as the altitude increases and the air becomes less dense?

    a. Power increases.
    b. Power remains stable.
    c. Power decreases.
    d. Engine stops.

28. What effect does surface friction have on winds?

    a. None.
    b. It causes winds to back and veer.
    c. It causes an increase in wind speeds.
    d. It causes lower wind speeds than would be expected from the pressure gradient.

29. An air mass is a large section of the troposphere with uniform properties of _____ and _____ in the _____.

    a. temperature, pressure, horizontal.
    b. pressure, moisture, horizontal.
    c. temperature, moisture, horizontal.
    d. temperature, moisture, vertical.

30. A katabatic wind:

    a. is the term for down slope winds flowing from high elevations down the slopes to valleys below.
    b. is the term for up slope winds flowing from valleys up the slopes to high elevations above.
    c. is the term for winds flowing from land to large bodies of water.
    d. is the term for winds flowing from large bodies of water to land.

31. An anabatic wind:

    a. is the term for down slope winds flowing from high elevations down the slopes to valleys below.
    b. is the term for up slope winds flowing from valleys up the slopes to high elevations above.
    c. is the term for winds flowing from land to large bodies of water.
    d. is the term for winds flowing from large bodies of water to land.

32. A gust is:

    a. a gradual change of wind direction associated with a change in altitude.
    b. a rapid and irregular change of wind speed.
    c. a regular and predictable change of wind speed.
    d. not considered important when learning about meteorology.

33. The three main factors that determine the weather in an air mass are:

    a. the moisture content, the temperature, and the stability of the air.
    b. the presence of condensation nuclei, the ambient pressure, and the altitude of the isothermal layer.
    c. the moisture content, the cooling process, and the altitude of the isothermal layer.
    d. the moisture content, the cooling process, and the stability of the air.

34. In stable air:

    a. stratus cloud and poor visibility are common.
    b. cumulus cloud and good visibility are common.

35. In unstable air:

    a. stratus cloud and poor visibility are common.
    b. cumulus cloud and good visibility are common.

36. A _____ air mass is more dense and therefore _____, undercutting a _____ air mass which will _____ over the cold air.

    a. warm, sinks, cold, ascend.
    b. cold, sinks, warm, ascend.
    c. cold, ascends, warm, sink.
    d. warm, ascends, cold, sink.

37. The shortest distance between two points on the surface of the Earth is represented by:

    a. a rhumb line.
    b. true heading.
    c. magnetic meridian.
    d. a great circle.

38. The angle between true heading and magnetic heading is:

    a. variation.
    b. magnetic dip.
    c. deviation.
    d. turning error.

39. On turns from south, northerly-turning error causes the compass to:

    a. lead.
    b. indicate correctly.
    c. lag.
    d. none of the above.

40. Lines drawn on a chart joining places having the same variation are:

    a. isobaric lines.
    b. isogonic lines.
    c. agonic lines.
    d. rhumb lines.

41. Meridians of longitude are:

    a. measured from 0–90 degrees east and west of the prime meridian.
    b. semi-great circles joining the geographic poles of the Earth.
    c. measured in hours, minutes, and seconds.
    d. all of the above.

42. Parallels of latitude are:

    a. circles on the Earth's surface that lie parallel to the equator.
    b. measured from 0–90 degrees north and south of the equator.
    c. measured in degrees, minutes, and seconds.
    d. all of the above.

43. The advantage of a great circle route is:

    a. it is the shortest distance between two points on the surface of the Earth.
    b. it can be followed at higher altitudes than great circle routes.
    c. the direction is constant, allowing a navigator to follow a constant heading.
    d. it is the most fuel-efficient route, especially when travelling from east to west.

44. The lubber line is:

    a. a painted white line that indicates the direction the airplane is heading.
    b. in line with or parallel to the longitudinal axis of the airplane.
    c. the location at which the compass card is read.
    d. all of the above.

45. What is your heading (in degrees) if you are flying northeast?

    a. 45 degrees.
    b. 135 degrees.
    c. 225 degrees.
    d. 315 degrees.

***Part B–Matching (5 points)***

1. Label the following parts on the propeller diagram below.

   a. Thrust
   b. Relative airflow
   c. Resultant
   d. Axis of rotation
   e. Torque force

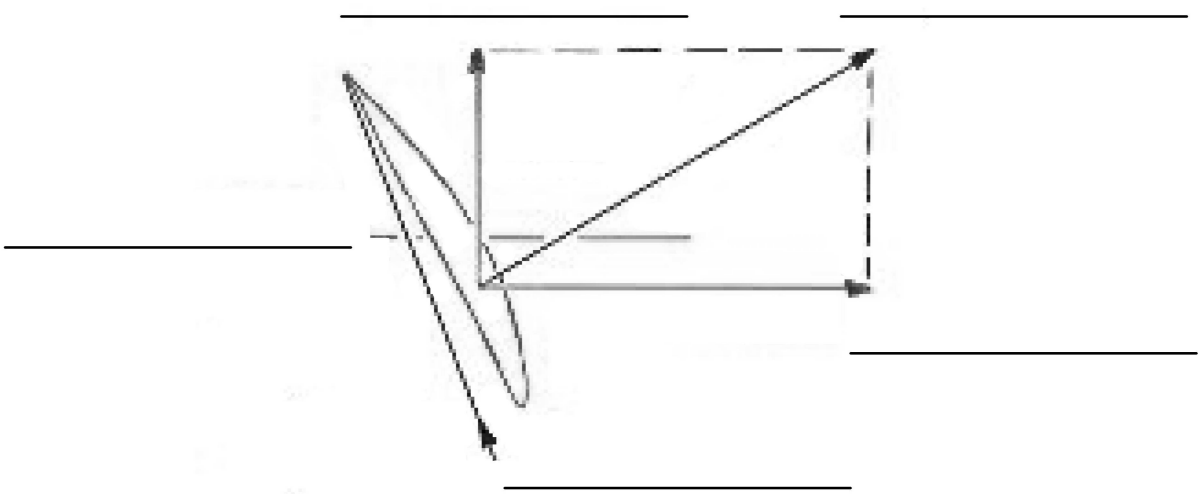

*This form shall be reproduced locally*.

**AVIATION SUBJECTS–COMBINED ASSESSMENT PC**
**REWRITE ANSWER KEY**

***Part A–Multiple Choice (45 points)***

1. Laminar airfoils are generally the thickest at _____ percent of the chord.

   a. 15.
   b. 25.
   **c. 50.**
   d. 65.

2. Laminar flow airfoils reduce drag by maintaining the _____ flow of air throughout a greater percentage of the _____.

   a. turbulent, chord.
   b. turbulent, span.
   **c. laminar, chord.**
   d. laminar, span.

3. Aspect ratio is calculated by:

   **a. dividing the span by the average chord.**
   b. dividing the average chord by the span.
   c. dividing the weight by the coefficient of lift.
   d. dividing the weight by the coefficient of drag.

4. Increasing the angle of incidence at the wing tip is called:

   **a. wash-in.**
   b. wash-up.
   c. wash-out.
   d. wash-off.

5. Which of the following is not a wing-tip modification designed to increase lift / reduce drag?

   a. Wing-tip fuel tanks.
   b. Winglets.
   c. Drooping the wing tips.
   **d. Wing fences.**

6. Auxiliary airfoils that move out in front of the leading edge at high angles of attack are called:

   **a. slats.**
   b. flaps.
   c. wing fences.
   d. slots.

7. Passages built into the wing that affect the airflow in the same way as slats are called:

   a. slats.
   b. flaps.
   c. wing fences.
   **d. slots.**

8. In addition to creating lift, flaps also create:

   a. thrust.
   b. weight.
   c. trim.
   **d. drag.**

9. The curvature of an airfoil is also called:

   a. chord.
   b. span.
   c. rib.
   **d. camber.**

10. Pitot pressure is the atmospheric pressure outside the aircraft, not affected by turbulence or motion.

    a. True.
    **b. False.**

11. The ASI is connected to both the pitot pressure source and the static pressure port.

    **a. True.**
    b. False.

12. Density errors in the ASI are caused by:

    a. an increase in the temperature of the air as the density increases.
    b. a decrease in the temperature of the air as the altitude decreases.
    c. blockages of the pitot static system due to the density of the air.
    **d. a decrease in the density of the air as the altitude increases.**

13. The IAS corrected for instrument and position errors is the:

    **a. CAS.**
    b. IAS.
    c. TAS.
    d. EAS.

14. When flying into an area with a relatively higher pressure, if the altimeter setting is not corrected, the altimeter will read:

    **a. lower than the actual altitude.**
    b. higher than the actual altitude.
    c. the correct altitude, provided that the pilot maintains a constant airspeed.
    d. the correct altitude, provided that the pilot maintains a constant angle of bank.

15. Density altitude is:

    a. the altitude displayed on the altimeter when it is set to 29.92 inches of mercury.
    b. the actual height above Earth's surface.
    **c. the pressure altitude corrected for temperature.**
    d. the pressure altitude corrected for absolute errors.

16. The VSI measures the rate of change of the pitot pressure and indicates if the altitude is increasing or decreasing.

    a. True.
    **b. False.**

17. Gyroscopic inertia is also known as:

    a. precession.
    **b. rigidity in space.**
    c. fluidity in space.
    d. rotation.

18. Precession is:

    **a. the tendency of a rotating body, when a force is applied perpendicular to its plane of rotation, to turn in the direction of its rotation 90 degrees to its axis and take up a new plane of rotation parallel to the force applied.**
    b. the tendency of a rotating object to remain in its plane of rotation.
    c. the tendency of a rotating body, when a force is applied parallel to its plane of rotation, to turn in the direction of its rotation 90 degrees to its axis and take up a new plane of rotation perpendicular to the force applied.
    d. the tendency of a rotating object to move from its plane of rotation.

19. Where should the fuel tank be positioned in a gravity feed system?

    **a. Above the carburetor.**
    b. Below the carburetor.
    c. In-line with the carburetor.
    d. Below the centre of gravity.

20. What does the fuel selector valve, used by the pilot, do?

    a. Transfer fuel.
    b. Select desired fuel tank to draw fuel.
    c. Shut off the flow of fuel from the tanks.
    **d. Both B and C.**

21. Forward movement of the throttle opens the throttle valve, which increases the fuel / air mixture, and increases the power being produced by the engine.

    **a. True.**
    b. False.

22. Which two gauges measure the properties of the engine oil?

    a. Oil pressure and cylinder head temperature gauges.
    b. Oil temperature and outside air temperature gauges.
    **c. Oil pressure and oil temperature gauges.**
    d. Oil temperature and oil viscosity gauges.

23. What is maintained throughout most of the diameter of the propeller by means of the variation in airfoil sections and the angle of attack?

    a. Pitch.
    b. Drag.
    **c. Thrust.**
    d. Dihedral.

24. What is the distance a propeller travels forward in one revolution?

    **a. Pitch.**
    b. Drag.
    c. Thrust.
    d. Dihedral.

25. What colour-coded arcs are found on the tachometer?

    a. Green, orange, red.
    b. Blue, red, green.
    **c. Green, yellow, red.**
    d. Black, white, red.

26. What reading will register on the manifold pressure gauge when the engine is not running?

    a. Engine power.
    **b. Atmospheric pressure.**
    c. Air temperature.
    d. Compression pressure.

27. What occurs to an engine as the altitude increases and the air becomes less dense?

    a. Power increases.
    b. Power remains stable.
    **c. Power decreases.**
    d. Engine stops.

28. What effect does surface friction have on winds?

    a. None.
    b. It causes winds to back and veer.
    c. It causes an increase in wind speeds.
    **d. It causes lower wind speeds than would be expected from the pressure gradient.**

29. An air mass is a large section of the troposphere with uniform properties of _____ and _____ in the _____.

    a. temperature, pressure, horizontal.
    b. pressure, moisture, horizontal.
    **c. temperature, moisture, horizontal.**
    d. temperature, moisture, vertical.

30. A katabatic wind:

    **a. is the term for down slope winds flowing from high elevations down the slopes to valleys below.**
    b. is the term for up slope winds flowing from valleys up the slopes to high elevations above.
    c. is the term for winds flowing from land to large bodies of water.
    d. is the term for winds flowing from large bodies of water to land.

31. An anabatic wind:

    a. is the term for down slope winds flowing from high elevations down the slopes to valleys below.
    **b. is the term for up slope winds flowing from valleys up the slopes to high elevations above.**
    c. is the term for winds flowing from land to large bodies of water.
    d. is the term for winds flowing from large bodies of water to land.

32. A gust is:

    a. a gradual change of wind direction associated with a change in altitude.
    **b. a rapid and irregular change of wind speed.**
    c. a regular and predictable change of wind speed.
    d. not considered important when learning about meteorology.

33. The three main factors that determine the weather in an air mass are:

    a. the moisture content, the temperature, and the stability of the air.
    b. the presence of condensation nuclei, the ambient pressure, and the altitude of the isothermal layer.
    c. the moisture content, the cooling process, and the altitude of the isothermal layer.
    **d. the moisture content, the cooling process, and the stability of the air.**

34. In stable air:

    **a. stratus cloud and poor visibility are common.**
    b. cumulus cloud and good visibility are common.

35. In unstable air:

    a. stratus cloud and poor visibility are common.
    **b. cumulus cloud and good visibility are common.**

36. A _____ air mass is more dense and therefore _____, undercutting a _____ air mass which will _____ over the cold air.

    a. warm, sinks, cold, ascend.
    **b. cold, sinks, warm, ascend.**
    c. cold, ascends, warm, sink.
    d. warm, ascends, cold, sink.

37. The shortest distance between two points on the surface of the Earth is represented by:

    a. a rhumb line.
    b. true heading.
    c. magnetic meridian.
    **d. a great circle.**

38. The angle between true heading and magnetic heading is:

    **a. variation.**
    b. magnetic dip.
    c. deviation.
    d. turning error.

39. On turns from south, northerly-turning error causes the compass to:

    **a. lead.**
    b. indicate correctly.
    c. lag.
    d. none of the above.

40. Lines drawn on a chart joining places having the same variation are:

    a. isobaric lines.
    **b. isogonic lines.**
    c. agonic lines.
    d. rhumb lines.

41. Meridians of longitude are:

    a. measured from 0–90 degrees east and west of the prime meridian.
    **b. semi-great circles joining the geographic poles of the Earth.**
    c. measured in hours, minutes, and seconds.
    d. all of the above.

42. Parallels of latitude are:

    a. circles on the Earth's surface that lie parallel to the equator.
    b. measured from 0–90 degrees north and south of the equator.
    c. measured in degrees, minutes, and seconds.
    **d. all of the above.**

43. The advantage of a great circle route is:

    **a. it is the shortest distance between two points on the surface of the Earth.**
    b. it can be followed at higher altitudes than great circle routes.
    c. the direction is constant, allowing a navigator to follow a constant heading.
    d. it is the most fuel-efficient route, especially when travelling from east to west.

44. The lubber line is:

    a. a painted white line that indicates the direction the airplane is heading.
    b. in line with or parallel to the longitudinal axis of the airplane.
    c. the location at which the compass card is read.
    **d. all of the above.**

45. What is your heading (in degrees) if you are flying northeast?

    **a. 45 degrees.**
    b. 135 degrees.
    c. 225 degrees.
    d. 315 degrees.

***Part B–Matching (5 points)***

1. Label the following parts on the propeller diagram below.

   a. Thrust
   b. Relative airflow
   c. Resultant
   d. Axis of rotation
   e. Torque force

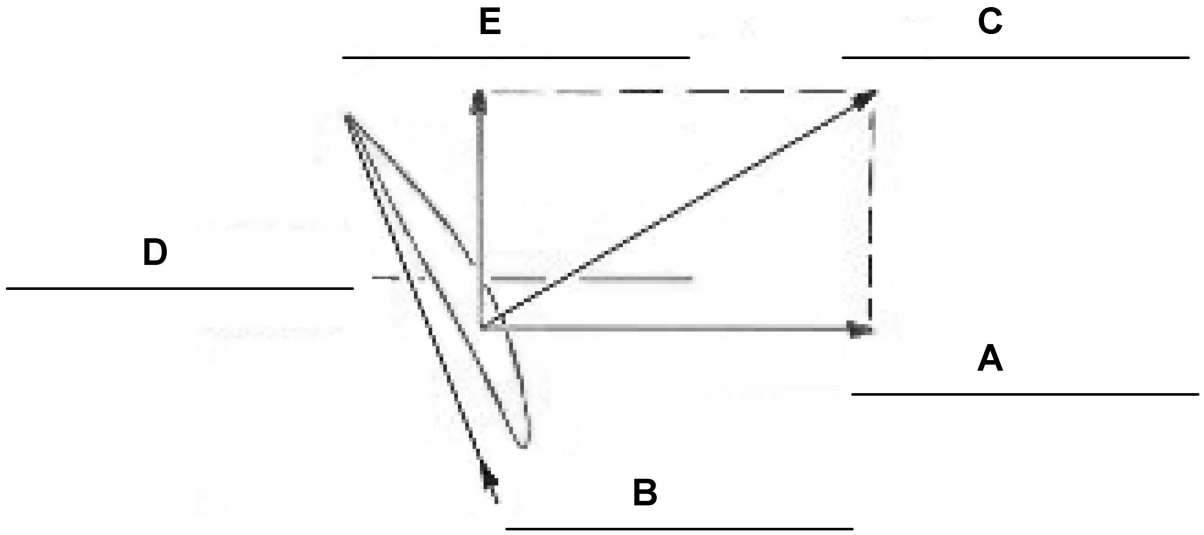

# ANNEX B, APPENDIX 7

# 490 PC

# ASSESSMENT INSTRUCTIONS

## PREPARATION

### PRE-ASSESSMENT INSTRUCTIONS

Review the assessment plan, assessment instructions and 490 PC Assessment Rubric and become familiar with the material prior to conducting the assessment.

There is no time allotted for 490 PC; it is to be administered during an aircrew survival exercise.

If the cadet does not achieve the performance standard, the cadet will be given additional opportunities for the 490 PC so the performance will be met.

Photocopy the 490 PC Assessment Rubric twice for each cadet.

### PRE-ASSESSMENT ASSIGNMENT

The cadet shall review the 490 PC Assessment Rubric and become familiar with the assessment criteria prior to the assessment.

### ASSESSMENT METHOD

Performance assessment and personal communication were chosen so the assessor may observe the cadet's ability to perform the required skill(s) and make a judgement on the quality of performance.

## CONDUCT OF ASSESSMENT

### PURPOSE

The purpose of this PC is to assess the cadet's ability to participate in an aircrew survival exercise.

### RESOURCES

- Two 490 PC Assessment Rubrics for each cadet,
- Two-burner naphtha stove,
- Dual-mantle naphtha lantern,
- Lantern storage carrier,
- Mantles,
- Naphtha,
- Fire extinguisher,
- Funnel,
- Drip pan,
- Matches,
- Needle-nose pliers,

- Spill response kit,
- Braided rope,
- Poles,
- GPS receiver with charged batteries,
- Hand-held radio with charged batteries,
- Waypoint form,
- Pen / pencil
- Aluminium can,
- Battery,
- Chocolate,
- Cordage,
- Knife,
- Magnesium fire starter,
- Magnifying glass, and
- Steel wool.

**ASSESSMENT ACTIVITY LAYOUT**

As per the aircrew survival exercise site.

**ASSESSMENT ACTIVITY INSTRUCTIONS**

While observing the cadet participating in an aircrew survival exercise, assess the quality of each criterion by indicating (eg, highlighting, circling, note taking) on the Assessment Rubric, the descriptive statement that best represents this judgment. Criteria for the 490 PC are assessed as:

- **Incomplete;**
- **Completed with difficulty;**
- **Completed without difficulty; or**
- **Exceeded standard**.

Make notes of observations to provide descriptive post-assessment feedback.

1. Have the cadet participate in each EO for PO 490.
2. Evaluate the cadet's skills by observation after each cadet takes part in each EO for PO 490. Record the result (eg, highlighting, circling, note taking) on the Assessment Rubric for each criterion.
3. Distribute the Assessment Rubric to the cadet for self-assessment purposes.

4. Tell the cadet their self-assessment will not be recorded on their qualification record.

5. Have the cadet assess their performance on their Assessment Rubric.

## POST ASSESSMENT INSTRUCTIONS

### RECORDING ASSESSMENT RESULTS

1. Indicate the overall performance assessment on the Assessment Checklist as:

   a. **Incomplete.** Overall, the cadet has not achieved the performance standard;

   b. **Completed with difficulty.** Overall, the cadet has achieved the performance standard with difficulty;

   c. **Completed without difficulty.** Overall, the cadet has achieved the performance standard without difficulty; or

   d. **Exceeded standard.** Overall, the cadet has exceeded the performance standard.

2. Record notes and observations in the assessor’s feedback section of the Assessment Checklist.

3. Sign and date the Assessment Checklist.

4. Ensure a copy of the Assessment Checklist is attached to the cadet's training file.

5. The overall result will be recorded on the Proficiency Level Four Qualification Record located at Chapter 3, Annex C.

### PROVIDING ASSESSMENT FEEDBACK

Discuss the cadet's self-assessment on their performance.

Ask the cadet what they felt went right during the survival exercise, what did not go well and ask the cadet how they would improve their performance if the survival exercise was conducted again.

Discuss the performance results of each section of the Assessment Rubric with the cadet.

Discuss the overall performance results with the cadet and provide the cadet with a copy of the completed rubric

## 490 PC ASSESSMENT RUBRIC

Cadet's Name: _____ Squadron: _____

Date: _____ Flight: _____

| | Incomplete | Completed With Difficulty | Completed Without Difficulty | Exceeded the Standard |
|---|---|---|---|---|
| Operated a stove and lantern. | Did not fill, pressurize, light, extinguish, drain, clean or perform minor maintenance on a stove and lantern. | Filled, pressurized, lit and extinguished a stove or lantern with assistance. | Filled, pressurized, lit, extinguished drained and cleaned a stove or lantern with minimal assistance. | Filled, pressurized, lit, extinguished, drained, cleaned and performed minor maintenance on a stove and lantern without assistance. |
| Tied knots and lashings. | Did not tie knots and lashings. | Tied a reef knot and a figure-of-eight knot and a round lashing. | Tied a reef knot, a figure-of-eight knot, a clove hitch, a round lashing and a square lashing. | Tied a reef knot, a figure-of-eight knot, a clove hitch and bowline and round lashing, a square lashing and a figure-of-eight lashing. |
| Navigating to a waypoint using a GPS. | Did not navigate to a waypoint. | Navigated to a few waypoints. | Navigated to most waypoints. | Navigated to all waypoints. |
| Lit Fires using improvised ignition. | Did not light fires using improvised ignitions. | Lit one fire using improvised ignition. | Lit more than one fire using improvised ignition. | Lit all fires using improvised ignition. |

This form shall be reproduced locally.

Assessor's Feedback:

| | PO 490 Overall Assessment | | | | | | | |
|---|---|---|---|---|---|---|---|---|
| **Check One** | **Incomplete** | | **Completed With Difficulty** | | **Completed Without Difficulty** | | **Exceeded Standard** | |
| **Overall Performance** | The cadet has not achieved the performance standard. | | The cadet has achieved the performance standard with difficulty. | | The cadet has achieved the performance standard without difficulty. | | The cadet has exceeded the performance standard. | |

| | |
|---|---|
| **Assessor's Name:** | **Position:** |
| **Assessor's Signature:** | **Date:** |

This form shall be reproduced locally.

THIS PAGE INTENTIONALLY LEFT BLANK

**PROFICIENCY LEVEL FOUR QUALIFICATION RECORD**

Cadet's Name: _____ Squadron: _____

| PO No. | Performance Statement | PO Assessment | | | |
|---|---|---|---|---|---|
| | | Incomplete | Completed with Difficulty | Completed Without Difficulty | Exceeded Standard |
| 400 | Participate in *Positive Social Relations for Youth* Training | | | | |
| X01 | Participate in Citizenship Activities | | | | |
| X02 | Perform Community Service | | | | |
| 403 | Act as a Team Leader | | | | |
| X04 | Track Participation in Physical Activities | | | | |
| X05 | Participate in Physical Activities | | | | |
| 406 | Fire the Cadet Air Rifle During Rec. Marksmanship | | | | |
| 407 | Serve in an Air Cadet Squadron | | | | |
| 408 | Command a Flight on Parade | | | | |
| 409 | Instruct a Lesson | | | | |
| X20 | Participate in CAF Familiarization Activities | | | | |
| 430 Series | Combined Aviation Subjects (POs 431, 432, 436 & 437) | | | | |
| 440 | Identify Aerospace Structures | | | | |
| 490 | Participate in an Aircrew Survival Exercise | | | | |

| Qualification Achieved | Yes | No | Training Officer<br><br>Signature:_____ | Date: _____ |
|---|---|---|---|---|

THIS PAGE INTENTIONALLY LEFT BLANK

# ANNEX D

# CADET INTERVIEW GUIDELINES

## GENERAL

The purpose of conducting an interview is to discuss the cadet's expectations, personal goals and learning progress (assessment for learning), and to provide feedback on overall performance.

Meet with the cadet throughout their training to discuss their progress towards achieving the qualification and to revise their action plan.

## PRE-INTERVIEW INSTRUCTIONS

Gather the required resources, such as the Cadet Interview Form (Appendix 1), training schedules, the Assessment of Learning Plan (Chapter 3, Annex B), PC assessment instruments, pen, paper, etc.

Have the cadets review any support materials so they are able to attend the interview prepared to discuss the specific topic areas, as well as their expectations and personal goals.

Schedule interviews to allow approximately 10–15 minutes per cadet.

## CONDUCT OF AN INTERVIEW

Tips for a successful interview:

- Ask questions that will provoke thought; avoid "yes or no" questions.
- Manage time by ensuring the cadet stays on topic.
- Listen and respond in a way that indicates you have heard and understood the cadet. This can be done by paraphrasing their ideas.
- Give the cadet time to respond to your questions.

1. Welcome the cadet.
2. Complete the Cadet Interview Form.
3. Have the cadet sign the Cadet Interview Form.
4. Sign the Cadet Interview Form.

## POST-INTERVIEW INSTRUCTIONS

Place a copy of the Cadet Interview Form in the cadet's training file.

THIS PAGE INTENTIONALLY LEFT BLANK

**ANNEX D, APPENDIX 1**

**CADET INTERVIEW FORM**

| Name: | Rank: |
|---|---|
| Proficiency Level: | Flight: |
| ***SECTION 1 – INITIAL INTERVIEW*** | |
| 1. What are your expectations for the proficiency level?<br>2. Do you have any questions about the training, schedule and / or assessment?<br>3. What activities are you most excited about?<br>4. What are your strengths?<br>5. What are some areas you would like to improve?<br>6. What personal goals would you like to attain? What steps will you take to achieve those goals?<br>7. Is there anything we should know to help make your training experience enjoyable (learning needs, allergies, etc.)? | |
| **NOTES** | |
| Cadet's Signature: | |
| Officer's Signature: | Date: |

| ***SECTION 2 – PERFORMANCE INTERVIEW*** | |
|---|---|
| 1. So far, is the proficiency level meeting your expectations? If not, what can we do to meet those expectations?<br>2. Are there any areas of excitement or concern you would like to highlight?<br>3. How do you feel about your progress? *<br>4. What are some areas you would like to improve?<br>5. What personal goals would you like to establish?<br>* Give the cadet feedback on their progress and their overall performance highlighting any gaps that may exist between their self-assessment and your observations. Points to discuss may include completed and upcoming assessments, attendance, participation, etc. | |
| **ACTION PLAN**<br>Work with the cadet to make an action plan that takes into consideration their goals and the training requirements. The action plan is a mutually agreed upon set of steps that the cadet commits to taking to reach their goals. It should be realistic and achievable and written using positive language. | |
| **NOTES** | |
| Cadet's Signature: | |
| Officer's Signature: | Date: |

| ***SECTION 3 – FINAL INTERVIEW*** | |
|---|---|
| 1. How did you enjoy the Proficiency Level?<br>2. What were some of your likes and dislikes about the training? How could it be improved?<br>3. How can you apply what you have learned inside and outside of cadets?<br>4. What are some new personal goals you want to establish?<br>5. What upcoming training opportunities interest you?<br>* Provide the cadet with a copy of their completed Qualification Record and discuss their learning progress towards course objectives. Where a waiver has been granted, explain to the cadet what this means and what they will be required to do in the following year to meet the current qualification requirements. | |
| **NOTES** | |
| Cadet's Signature: | |
| Officer's Signature: | Date: |

THIS PAGE INTENTIONALLY LEFT BLANK

# ANNEX E

# TRAINING COUNSELLING SESSION GUIDELINES

## GENERAL

The purpose of the Training Counselling Session (TCS) is to formally meet with a cadet who is having difficulty achieving and / or maintaining qualification standards and to create an action plan to assist this cadet.

## PRE-COUNSELLING SESSION INSTRUCTIONS

Gather the required resources, such as TCS Form, cadet's training file, pen, paper, etc.

Review the cadet's training file and discuss their performance with other staff members as required.

Complete Section 1 of the TCS Form.

## CONDUCT OF COUNSELLING SESSION

Tips for a successful interview:

- Ask questions that will provoke thought; avoid "yes or no" questions.
- Manage time by ensuring the cadet stays on topic.
- Listen and respond in a way that indicates you have heard and understood the cadet. This can be done by paraphrasing their ideas.
- Give the cadet time to respond to your questions.

1. Welcome the cadet.
2. Complete Sections 2 and 3 of the TCS Form.
3. Have the cadet sign the TCS Form.
4. Sign the TCS Form.

## POST-COUNSELLING SESSION INSTRUCTIONS

The goal of conducting training counselling is to guide a cadet towards success in the Cadet Program. Following the training counselling session the Training Officer shall meet with the CO to discuss the outcome of the session and any further steps required.

The Commanding Officer shall contact the guardian to open the lines of dialogue and include them in the action plan.

THIS PAGE INTENTIONALLY LEFT BLANK

## ANNEX E, APPENDIX 1

## TRAINING COUNSELLING SESSION FORM

| **SECTION 1 – BACKGROUND INFORMATION** | |
|---|---|
| Name: | Rank: |
| Proficiency Level: | Flight: |
| Circumstances requiring TCS: | |
| Overall training progress (eg, seriousness of failure, performance in related POs, any previous difficulty and action taken, performance / behaviour, etc.): | |
| **SECTION 2 – SESSION FINDINGS** | |
| 1. Inform the cadet they are not achieving and / or maintaining qualification standards and that you are meeting to help them correct the situation.<br>2. Discuss the following:<br>• Circumstances affecting training progress<br>• Any previous difficulty and action taken (eg, whether or not help / additional training was provided)<br>• Overall performance / behaviour of cadet (eg, attendance, effort, motivation, attitude) | |

| **SECTION 3 – SESSION RECOMMENDATIONS (ACTION PLAN)** | |
|---|---|
| With the cadet, create an action plan that highlights the actions required for success.<br><br>Brief the cadet on the consequences should no improvement be noticed. | |
| Cadet's Signature: | |
| Training Officer's Signature: | Date: |
| **SECTION 4 – COMMANDING OFFICER REVIEW** | |
| Record any discussion with parents regarding the progress of the cadet. | |
| Commanding Officer's Signature: | Date: |

# CHAPTER 4

# PERFORMANCE OBJECTIVES

**PO 400**

1. **Performance**: Participate in *Positive Social Relations for Youth* Training

2. **Conditions**:

   a. Given:

      (1) Supervision, and

      (2) Assistance as required.

   b. Denied: Nil.

   c. Environmental: Classroom or training area large enough to accommodate the entire group.

3. **Standard**: IAW A-CR-CCP-915/PG-001, *Positive Social Relations for Youth Training Facilitator's Package*, the cadet will participate in Module 2—Influencing Positive Social Relations.

4. **Remarks**: Nil.

THIS PAGE INTENTIONALLY LEFT BLANK

**CITIZENSHIP**

1. **PO X01 – Participate in Citizenship Activities**

   This PO and its associated EOs are located in A-CR-CCP-801/PG-001, *Royal Canadian Air Cadets Proficiency LevelOne Qualification Standard and Plan*.

THIS PAGE INTENTIONALLY LEFT BLANK

**COMMUNITY SERVICE**

1. **PO X02 – Perform Community Service**

This PO and its associated EOs are located in A-CR-CCP-801/PG-001, *Royal Canadian Air Cadets Proficiency Level One Qualification Standard and Plan*.

THIS PAGE INTENTIONALLY LEFT BLANK

**PO 403**

1. **Performance**: Act as a Team Leader

2. **Conditions**:

   a. Given:

      (1) Supervision, and

      (2) Assistance as required.

   b. Denied: Nil.

   c. Environmental: Any.

3. **Standard**: The cadet will act as a team leader, to include:

   a. striving to meet the needs and expectations of team members;

   b. employing a leadership approach;

   c. motivating team members;

   d. providing feedback to team members;

   e. participating in a mentoring relationship; and

   f. leading a team during a leadership appointment, to include:

      (1) setting a positive example;

      (2) fostering teamwork by contributing to positive team dynamics;

      (3) communicating clearly the task(s) to be accomplished;

      (4) supervising cadets;

      (5) solving problems, as required;

      (6) debriefing the team; and

      (7) reporting to superiors.

4. **Remarks**: Nil.

5. **Complementary Material**:

   a. Complementary material associated with PO 403 is designed to enhance the cadet's ability to act as a team leader, specifically:

      (1) EO C403.01 (Participate in a Leadership Seminar); and

   b. Some complementary training offered in previous levels may be selected as complementary training in Proficiency Level Four, specifically:

      (1) EO C303.01 (Lead a Team Building Activity), and

      (2) EO C303.02 (Deliver a Presentation About a Leader).

THIS PAGE INTENTIONALLY LEFT BLANK

**EO M403.01**

1. **Performance**: Describe Needs and Expectations of Team Members

2. **Conditions**:

   a. Given:

      (1) Supervision, and

      (2) Assistance as required.

   b. Denied: Nil.

   c. Environmental: Classroom or training area large enough to accommodate the entire group.

3. **Standard**: The cadet shall describe:

   a. the needs of team members, and

   b. the expectations that a team member has of a team leader.

4. **Teaching Points**:

| TP | Description | Method | Time | Refs |
|---|---|---|---|---|
| TP1 | Describe the needs of team members, to include:<br>a. acceptance of and by other team members,<br>b. acceptance and understanding of leaders,<br>c. approval of leaders, and<br>d. opportunities to try different tasks and roles. | Interactive Lecture | 5 min | C0-115 (pp. 12–13) |
| TP2 | Conduct an activity where cadets describe the expectations that a team member has of a team leader, to include:<br>a. good leadership, to include:<br>(1) leading by example;<br>(2) putting the needs of the team members first; and<br>(3) being sensitive to cultural and gender differences;<br>b. effective communication, to include:<br>(1) giving information on what is expected of them;<br>(2) explaining changes in situations;<br>(3) asking for assistance with tasks; and<br>(4) providing concrete examples during explanations; and | In-Class Activity | 10 min | A0-047<br>A0-048<br>A0-131 (pp. 4-8 to 4-14)<br>C0-115 (p. 12, 177-183) |

| TP | Description | Method | Time | Refs |
|---|---|---|---|---|
| | c. effective supervision, to include:<br>(1) operating in a safe environment;<br>(2) freedom from over-supervision; and<br>(3) recognition of good performance. | | | |
| TP3 | Conduct a group discussion on how a team leader should strive to meet the needs and expectations of team members. | Group Discussion | 10 min | |

5. **Time**:

| | | |
|---|---|---|
| a. | Introduction / Conclusion: | 5 min |
| b. | Interactive Lecture: | 5 min |
| c. | In-Class Activity: | 10 min |
| d. | Group Discussion: | 10 min |
| e. | Total: | 30 min |

6. **Substantiation**:

a. An interactive lecture was chosen for TP 1 to orient the cadets to team members' needs.

b. An in-class activity was chosen for TP 2 as it is an interactive way to provoke thought and stimulate interest among cadets about expectations that a team member has of a team leader.

c. A group discussion was chosen for TP 3 as it allows the cadets to interact with their peers and share their knowledge, experiences, opinions and feelings about how a team leader should strive to meet team members needs and expectations.

7. **References**:

a. A0-047 A-PA-005-000/AP-004 Canadian Defence Academy–Canadian Forces Leadership Institute. (2005). *Leadership in the CF conceptual foundations*. Ottawa, ON: Department of National Defence.

b. A0-048 A-PA-005-000/AP-003 Canadian Defence Academy–Canadian Forces Leadership Institute. (2005). *Leadership in the CF doctrine foundations*. Ottawa, ON: Department of National Defence.

c. A0-131 A-CR-CCP-910/PT-001 Director Cadets 6. (1989). *Training school leadership*. Ottawa, ON: Department of National Defence.

d. C0-115 ISBN 0-7879-4059-3 van Linden, J. A., & Fertman, C. I. (1998). *Youth leadership*. San Francisco, CA: Jossey-Bass Inc., Publishers.

8. **Training Aids**: Presentation aids (eg, whiteboard / flip chart / OHP / multimedia projector) appropriate for the classroom / training area.

9. **Learning Aids**: Needs and Expectations of Team Members handout.

10. **Test Details**: This EO is assessed IAW Chapter 3, Annex B, 403 PC.

11. **Remarks**: Nil.

**EO M403.02**

1. **Performance**: Select a Leadership Approach

2. **Conditions**:

   a. Given:

      (1) Supervision, and

      (2) Assistance as required.

   b. Denied: Nil.

   c. Environmental: Classroom or training area large enough to accommodate the entire group.

3. **Standard**: The cadet shall select a leadership approach during:

   a. a leadership assignment, and

   b. a leadership appointment.

4. **Teaching Points**:

| TP | Description | Method | Time | Refs |
|---|---|---|---|---|
| TP1 | Describe transactional and transformational leadership. | Interactive Lecture | 5 min | C0-115 (pp. 8–10)<br>C0-410 |
| TP2 | Describe the outcomes that occur as a result of the team leader focussing on the team members and the goal. | Interactive Lecture | 10 min | C0-413 |
| TP3 | Describe leadership approaches, to include:<br>a. the key aspects of each approach, to include:<br>(1) control,<br>(2) coach, and<br>(3) empower; and<br>b. selecting an approach based on the:<br>(1) simplicity of the task,<br>(2) safety of the cadets,<br>(3) capability of the cadets, and<br>(4) motivation of the cadets. | Interactive Lecture | 15 min | |
| TP4 | Conduct an activity where the cadets will explain what leadership approach they would select and why for a given scenario. | In-Class Activity | 20 min | |

5. **Time**:

| | | |
|---|---|---|
| a. | Introduction / Conclusion: | 10 min |
| b. | Interactive Lecture: | 30 min |
| c. | In-Class Activity: | 20 min |
| d. | Total: | 60 min |

6. **Substantiation**:

   a. An interactive lecture was chosen for TPs 1, 2 and 3 to review, clarify, emphasize and summarize transactional and transformational leadership, the outcomes of a team leader's focus and leadership approaches.

   b. An in-class activity was chosen for TP 4 as it is an interactive way to provoke thought and stimulate interest among cadets.

7. **References**:

   a. C0-115 ISBN 0-7879-4059-3 van Linden, J. A., & Fertman, C. I. (1998). *Youth leadership*. San Francisco, CA: Jossey-Bass Inc., Publishers.

   b. C0-410 The ASPIRA Association. (2009). *Module #5: Defining leadership styles*. Retrieved on February 12, 2009, from http://www.aspira.org/files/documents/youthdev08/U_V_M_5_dls.pdf

   c. C0-413 University of Arkansas, Division of Agriculture, Cooperative Extension Service. (2006). *4-H volunteer leaders' series: The enabler–A leadership style*. Retrieved February 18, 2009, from http://www.uaex.edu/other_areas/publications/PDF/4HCD2.pdf

8. **Training Aids**:

   a. Presentation aids (eg, whiteboard / flip chart / OHP / multimedia projector) appropriate for the classroom / training area, and

   b. Scenarios.

9. **Learning Aids**: Scenarios.

10. **Test Details**: This EO is assessed IAW Chapter 3, Annex B, 403 PC.

11. **Remarks**: Cadets will select leadership approaches during leadership assignments and leadership appointments throughout the training year.

**EO M403.03**

1. **Performance**: Motivate Team Members

2. **Conditions**:

   a. Given:

      (1) Supervision, and

      (2) Assistance as required.

   b. Denied: Nil.

   c. Environmental: Classroom or training area large enough to accommodate the entire group.

3. **Standard**: The cadet shall describe how to motivate team members by:

   a. recognizing extrinsic and intrinsic motivation;

   b. encouraging development of knowledge and skills; and

   c. recognizing cadets for the effort they put toward a task.

4. **Teaching Points**:

| TP | Description | Method | Time | Refs |
|---|---|---|---|---|
| TP1 | Conduct an in-class activity where the cadets will explain to each other the advantages and disadvantages of extrinsic and intrinsic motivators. | In-Class Activity | 20 min | C0-245 (pp. 30–35)<br>C0-414<br>C0-415 |
| TP2 | Explain why team leaders should encourage intrinsic motivation. | Interactive Lecture | 5 min | C0-401 (pp. 55–58) |
| TP3 | Conduct a group discussion about when and how team leaders motivate team members, to include:<br>a. praising effort and perseverance during a task;<br>b. praising the use of different strategies during a task;<br>c. praising improvement during a task;<br>d. encouraging the development of knowledge and skills;<br>e. praising the completion of a task;<br>f. thanking team members for their endeavours; and<br>g. giving credit for the completion of tasks to the team rather than yourself. | Group Discussion | 25 min | C0-411 |

5. **Time**:

| | | |
|---|---|---|
| a. | Introduction / Conclusion: | 10 min |
| b. | In-Class Activity: | 20 min |
| c. | Interactive Lecture: | 5 min |
| d. | Group Discussion: | 25 min |
| e. | Total: | 60 min |

6. **Substantiation**:

   a. An in-class activity was chosen for TP 1 as it is an interactive way to provoke thought and stimulate interest among cadets about advantages and disadvantages of extrinsic and intrinsic motivators.

   b. An interactive lecture was chosen for TP 2 to orient the cadets to encourage intrinsic motivation.

   c. A group discussion was chosen for TP 3 as it allows the cadets to interact with their peers and share their knowledge, experiences, opinions and feelings about when and how to motivate team members.

7. **References**:


   a. C0-245 ISBN 1-58062-513-4 Adams, B. (2001). *The everything leadership book*. Avon, MA: Adams Media.

   b. C0-401 ISBN 0-7879-6068-3 Hesselbein, F., & Johnston, R. (2002). *A leader to leader guide: On mission and leadership*. San Francisco, CA: Jossey-Bass Publishing.

   c. C0-411 Dweck, C. S. (2007). The perils and promises of praise. *Education Leadership*, 65(2), 34-39.

   d. C0-414 Bainbridge, C. (2009). About.com: Gifted children. *Extrinsic Motivation*. Retrieved on February 26, 2009, from http://giftedkids.about.com/od/glossary/g/extrinsic.htm

   e. C0-415 Bainbridge, C. (2009). About.com: Gifted children. *Intrinsic Motivation*. Retrieved on February 26, 2009, from http://giftedkids.about.com/od/glossary/g/intrinsic.htm


8. **Training Aids**: Presentation aids (eg, whiteboard / flip chart / OHP / multimedia projector) appropriate for the classroom / training area.

9. **Learning Aids**: Extrinsic and Intrinsic Motivation handouts.

10. **Test Details**: This EO is assessed IAW Chapter 3, Annex B, 403 PC.

11. **Remarks**: Nil.

**EO M403.04**

1. **Performance**: Provide Feedback to Team Members

2. **Conditions**:

   a. Given:

      (1) Supervision, and

      (2) Assistance as required.

   b. Denied: Nil.

   c. Environmental: Classroom or training area large enough to accommodate the entire group.

3. **Standard**: The cadet shall:

   a. recognize when feedback must be provided; and

   b. provide feedback.

4. **Teaching Points**:

| TP | Description | Method | Time | Refs |
|---|---|---|---|---|
| TP1 | Have the cadets brainstorm and prepare a list of times when feedback should be provided. | In-Class Activity | 5 min | C0-258 |
| TP2 | Explain the principles of effective feedback, to include:<br>a. frequent,<br>b. accurate,<br>c. specific, and<br>d. timely. | Interactive Lecture | 10 min | C0-412 (pp. 3–10, pp. 111–113) |
| TP3 | Explain the ground rules for providing feedback, to include:<br>a. focusing on what is observed;<br>b. focusing on behaviour;<br>c. keeping it neutral;<br>d. using it to inform;<br>e. making it supportive; and<br>f. keeping it simple. | Interactive Lecture | 10 min | C0-403 (pp. 11–15, pp. 111–116) |
| TP4 | Explain the steps for providing feedback, to include:<br>a. planning what to say;<br>b. providing examples of behaviours;<br>c. allowing time for feedback; | Interactive Lecture | 10 min | C0-404 |

| TP | Description | Method | Time | Refs |
|---|---|---|---|---|
| | d. motivating; and<br>e. setting a timeline for action and follow-up.<br>Explain the steps for receiving feedback, to include:<br>a. seeing each feedback session as a learning opportunity;<br>b. actively listening to the sender's ideas;<br>c. asking for more information if the ideas are not understood;<br>d. being honest about how the feedback is affecting one's emotions; and<br>e. remaining open-minded about future learning opportunities. | | | |
| TP5 | Using scenarios, have the cadets practice providing feedback to team members. | In-Class Activity | 15 min | |

5. **Time**:

| | | |
|---|---|---|
| a. | Introduction / Conclusion: | 10 min |
| b. | In-Class Activity: | 20 min |
| c. | Interactive Lecture: | 30 min |
| d. | Total: | 60 min |

6. **Substantiation**:

a. An in-class activity was chosen for TPs 1 and 5 as an interactive way to provoke thought, and to stimulate an interest among cadets about feedback.

b. An interactive lecture was chosen for TPs 2–4 to orient the cadets to giving effective feedback.

7. **References**:

a. C0-258 ISBN 978-1-59869-450-5 Nigro, N. (2008). *The everything coaching and mentoring book*. (2nd ed.). Avon, MA: F+W Publications Company.

b. C0-403 Peeling, G. (2000). *Feedback techniques: 7 things to know about giving feedback: Trainers Guide*. Cambridgeshire, England: Fenman Limited.

c. C0-404 Mochal, T. (2006). *Follow these six steps when providing constructive performance feedback*. Retrieved February 5, 2009, from http://articles.techrepublic.com.com/5100-10878_11-6102736.html

d. C0-412 ISBN 978-0-87425-495-2 Tulgan, B. (1999). *Fast feedback* (2nd ed). Amherst, MA: HRD Press, Inc.

8. **Training Aids**:

   a. Presentation aids (eg, whiteboard / flip chart / OHP / multimedia projector) appropriate for the classroom / training area, and

   b. Scenarios.

9. **Learning Aids**:

   a. Effective Feedback handout, and

   b. Scenarios.

10. **Test Details**: This EO is assessed IAW Chapter 3, Annex B, 403 PC.

11. **Remarks**: Nil.

THIS PAGE INTENTIONALLY LEFT BLANK

**EO M403.05**

1. **Performance**: Participate in a Mentoring Relationship

2. **Conditions**:

   a. Given:

      (1) Scenario,

      (2) Supervision, and

      (3) Assistance as required.

   b. Denied: Nil.

   c. Environmental: Classroom or training area large enough to accommodate the entire group.

3. **Standard**: The cadet shall participate in a mentoring relationship by:

   a. providing feedback and coaching to junior cadets; and

   b. receiving feedback and coaching from senior cadets or staff.

4. **Teaching Points**:

| TP | Description | Method | Time | Refs |
|---|---|---|---|---|
| TP1 | Review the mentoring relationship, to include:<br>a. recognizing the purpose of a mentoring relationship;<br>b. identifying the benefits of participating in a mentoring relationship;<br>c. contributing to a mentoring match;<br>d. being open to new things;<br>e. being responsive to suggestions and constructive criticism;<br>f. providing feedback to the mentor;<br>g. learning from the mentor's example;<br>h. participating in mentoring activities; and<br>i. appreciating the mentoring relationship. | Interactive Lecture | 5 min | C0-258 (pp. 15–21, 37–48, 70–73) |
| TP2 | Discuss the difference between formal and informal mentoring. | Group Discussion | 5 min | C0-258 (p. 20, p. 64, pp. 78–79, 174–178, 182–187)<br>C0-405 (pp. 9–18, 59–87) |

| TP | Description | Method | Time | Refs |
|---|---|---|---|---|
| TP3 | Describe the steps of a formal mentoring session, to include:<br>a. getting acquainted;<br>b. setting goals;<br>c. meeting goals and expectations; and<br>d. concluding the mentoring session. | Interactive Lecture | 10 min | C0-258 (pp. 260–265) |
| TP4 | Demonstrate and explain a mentoring session, to include:<br>a. keeping the mentoring relationship professional;<br>b. keeping the conversation during the mentoring session in confidence; and<br>c. using the ground rules for feedback during a mentoring session. | Demonstration | 10 min | C0-258 (pp. 260–265)<br>C0-324 (pp. 21–26, p. 31, p. 32) |
| TP5 | Have the cadets role-play a mentoring session based on two given scenarios. Cadets will role-play the mentor in one scenario, and the cadet being mentored in another scenario. | Role-Play | 20 min | C0-258 (pp. 260–265)<br>C0-324 (pp. 21–26, p. 31, p. 32) |

5. **Time**:

| | | |
|---|---|---|
| a. | Introduction / Conclusion: | 10 min |
| b. | Interactive Lecture: | 15 min |
| c. | Group Discussion: | 5 min |
| d. | Demonstration: | 10 min |
| e. | Role-Play: | 20 min |
| f. | Total: | 60 min |

6. **Substantiation**:

a. An interactive lecture was chosen for TPs 1 and 3 to review the mentoring relationship and to orient the cadets to the steps in a mentoring session.

b. A group discussion was chosen for TP 2 as it allows the cadets to interact with their peers and share knowledge, experiences, opinions and feeling about formal and informal mentoring.

c. A demonstration was chosen for TP 4 as it allows the instructor to explain and demonstrate a mentoring session.

d. A role-play was chosen for TP 5 as it provides the cadets an opportunity to view and then conduct a mentoring session under supervision.

7. **References**:


a. C0-258 ISBN 978-1-59869-450-5 Nigro, N. (2008). *The everything coaching and mentoring book*. (2nd ed.). Avon, MA: F+W Publications Company.

b. C0-324 Taylor, J. S. (2003). *Training new mentees: A manual for preparing youth in mentoring programs*. USA: The National Mentoring Center.

c. C0-405 ISBN 0-7879-6294-5 Rhodes, J. (2002). *New directions for youth development: A critical view of youth mentoring*. New York, NY: Jossey-Bass.


8. **Training Aids**:

a. Presentation aids (eg, whiteboard / flip chart / OHP / multimedia projector) appropriate for the classroom / training area, and

b. Scenarios.

9. **Learning Aids**: Scenarios.

10. **Test Details**: Nil.

11. **Remarks**: Cadets will have opportunities to participate in formal and informal mentoring relationships through the training year. A cadet in Proficiency Level Four is in a position to both mentor a subordinate cadet and be mentored by a more senior cadet and / or adult staff member.

THIS PAGE INTENTIONALLY LEFT BLANK

**EO M403.06**

1. **Performance**: Act as a Team Leader During a Leadership Appointment

2. **Conditions**:

   a. Given:

      (1) Supervision, and

      (2) Assistance as required.

   b. Denied: Nil.

   c. Environmental: Classroom or training area large enough to accommodate the entire group.

3. **Standard**: The cadet shall act as a team leader during a leadership appointment by:

   a. preparing for the leadership appointment;

   b. carrying out the tasks associated with the leadership appointment;

   c. giving feedback to the team; and

   d. meeting with the activity manager to discuss the outcomes of the leadership appointment.

4. **Teaching Points**:

| TP | Description | Method | Time | Refs |
|---|---|---|---|---|
| TP1 | Describe a leadership assignment and a leadership appointment. | Interactive Lecture | 5 min | |
| TP2 | Describe the leadership appointments that may be assigned at the squadron. | Interactive Lecture | 5 min | |
| TP3 | Describe how to conduct the leadership appointment, to include:<br>a. preparing for the leadership appointment, to include:<br>(1) ensuring the required resources are available;<br>(2) completing a time appreciation; and<br>(3) making a plan;<br>b. briefing the team members during the leadership appointment, to include:<br>(1) communicating the overall plan;<br>(2) communicating the tasks involved in the leadership appointment;<br>(3) assigning tasks to team members as applicable; and<br>(4) ensuring the team members understand their tasks; | Interactive Lecture | 15 min | C0-114 (p. 16, p. 36, p. 99)<br>C0-243<br>C0-245 (pp. 70–71)<br>C0-247 (pp. 133–136)<br>C0-248 (p. 20, p. 21)<br>C0-253 (p. 24)<br>C0-254 (p. 34, p. 35)<br>C0-255 (pp. 86–89)<br>C0-256 (p. 54, p. 55) |

| TP | Description | Method | Time | Refs |
|---|---|---|---|---|
| | c. carrying out the tasks associated with the leadership appointment, to include:<br>(1) supervising team members;<br>(2) ensuring the tasks within the appointment are progressing according to the time allotted;<br>(3) providing feedback to the team members throughout the appointment; and<br>(4) modifying the plan as required;<br>d. providing feedback to the team members upon conclusion of the leadership appointment; and<br>e. meeting with the activity manager to discuss the outcomes of the leadership appointment. | | | |

5. **Time**:

| | | |
|---|---|---|
| a. | Introduction / Conclusion: | 5 min |
| b. | Interactive Lecture: | 25 min |
| c. | Total: | 30 min |

6. **Substantiation**: An interactive lecture was chosen for this lesson to orient the cadets to the leadership appointment.

7. **References**:


a. C0-114 ISBN 0-02-863656-2 Pell, A. R. (1999). *The complete idiot's guide to team building*. Indianapolis, IN: Alpha Books.

b. C0-243 Clark, D. (2007). *After action reviews*. Retrieved February 21, 2008, from http://www.nwlink.com/~donclark/leader/leadaar.html

c. C0-243 Clark, D. (2007). *Leadership & direction*. Retrieved February 21, 2008, from http://www.nwlink.com/~donclark/leader/leaddir.html

d. C0-245 ISBN 1-58062-513-4 Adams, B. (2001). *The everything leadership book*. Avon, MA: Adams Media.

e. C0-247 ISBN 0-14-024272-4 Rosen, R. H., & Brown, P. B. (1997). *Leading people*. New York, NY: Penguin Books.

f. C0-248 ISBN 0-7894-4862-9 Heller, R. (1999). *Learning to lead*. New York, NY: DK Publishing, Inc.

g. C0-253 ISBN 0-7894-8006-9 Bruce, A., & Langdon, K. (2001). *Do it now!* New York, NY: DK Publishing, Inc.

h. C0-254 ISBN 0-7894-3244-7 Heller, R. (1998). *Communicate clearly*. New York, NY: DK Publishing, Inc.

i. C0-255 ISBN 0-7645-5408-5 Brounstein, M. (2002). *Managing teams for dummies*. Indianapolis, IN: Wiley Publishing, Inc.

j. C0-256 ISBN 0-7894-4863-7 Heller, R. (1999). *Achieving excellence*. New York, NY: DK Publishing, Inc.

8. **Training Aids**: Presentation aids (eg, whiteboard / flip chart / OHP / multimedia projector) appropriate for the classroom / training area.

9. **Learning Aids**: Leadership Appointment Aide-Mémoire.

10. **Test Details**: This EO is assessed IAW Chapter 3, Annex B, 403 PC.

11. **Remarks**: Acquire the list of leadership appointments developed by the Training Officer before instructing this lesson.

THIS PAGE INTENTIONALLY LEFT BLANK

**EO C403.01**

1. **Performance**: Participate in a Leadership Seminar

2. **Conditions**:

   a. Given:

      (1) Supervision, and

      (2) Assistance as required.

   b. Denied: Nil.

   c. Environmental: Classroom or training area large enough to accommodate the entire group.

3. **Standard**: The cadet shall participate in a leadership seminar.

4. **Teaching Points**: Have the cadets participate in a leadership seminar on one or more of the following topics:

   a. problem solving,

   b. time management,

   c. communication, and

   d. supervision.

5. **Time**:

| | | |
|---|---|---|
| a. | Introduction / Conclusion: | 10 min |
| b. | Seminar: | 80 min |
| c. | Total: | 90 min |

6. **Substantiation**: A seminar method was chosen for this lesson to stimulate active participation in a tutorial setting and to allow cadets to practice reflective thinking skills. Seminars assist cadets in developing new and imaginative interpretations of leadership topics being explored. Seminars are an interactive way to exchange information on techniques and approaches to the leadership subjects being researched and discussed.

7. **References**:


   a. C0-022 ISBN 0-02864-207-4 Cole, Kris (2002). *The complete idiot's guide to clear communication*. Indianapolis, IN: Alpha Books.

   b. C0-115 ISBN 0-7879-4059-3 van Linden, J. A., & Fertman, C. I. (1998). *Youth leadership*. San Francisco, CA: Jossey-Bass Inc., Publishers.

   c. C0-425 Shurdington Scouts Resource. (1999). *NASA exercise: Survival on the moon*. Retrieved April 14, 2009, from http://www.shurdington.org/Downloads/NASA%20Exercise.pdf

   d. C0-477 Mindtools: Essential skills for an excellent career. (2009). *Stepladder technique: Making better group decisions*. Retrieved April 14, 2009, from http://www.mindtools.com/pages/article/newTED_89.htm

   e. C0-477 Mindtools: Essential skills for an excellent career. (2009). *Six thinking hats*. Retrieved April 14, 2009, from http://www.mindtools.com/pages/article/newTED_07.htm

f. C0-477 Mindtools: Essential skills for an excellent career. (2009). *Why do we procrastinate*. Retrieved March 30, 2009, from http://www.mindtools.com/pages/article/newHTE_96.htm

g. C0-477 Mindtools: Essential skills for an excellent career. (2009). *Preparing a to-do list*. Retrieved March 30, 2009, from http://www.mindtools.com/pages/article/newHTE_05.htm

h. C0-477 Mindtools: Essential skills for an excellent career. (2009). *Simple prioritization*. Retrieved March 30, 2009, from http://www.mindtools.com/pages/article/newHTE_92.htm

i. C0- 479 PedagoNet: Brainteasers. (2009). *Problem solving: Do you have the answer?* Retrieved April 15, 2009, from http://www.pedagonet.com/brain/brainers.html

j. C0-480 Discovery Education. (2009). *Brain boosters*. Retrieved April 15, 2009, from http://school.discoveryeducation.com/brainboosters/

k. C0-481 Total success: A different type of training. (2009). *Time management: Manage yourself, not your time*. Retrieved March 31, 2009, from, http://www.tsuccess.dircon.co.uk/timemanagementtips.htm

l. C0-482 About.com: Small Business: Canada. (2009). *11 Time management tips*. Retrieved March 30, 2009, from, http://sbinfocanada.about.com/cs/timemanagement/a/timemgttips.htm

m. C0-483 College Board: Inspiring Minds (2009). *Time management tips for high school students*. Retrieved March 31, 2009, from, http://www.collegeboard.com/student/plan,college-success/116.html

n. C0-487 Department for Community Development, Government of Western Australia. (2008). *Supervision of children*. Retrieved April 1, 2009, from http://www.pscwa.org.au/documents/DCDGUIOSHCFactSheetSupervisionofChildren.pdf

8. **Training Aids**: Presentation aids (eg, whiteboard / flip chart / OHP / multimedia projector) appropriate for the classroom / training area.

9. **Learning Aids**:

   a. Scenarios, and

   b. Handouts for the seminar selected.

10. **Test Details**: Nil.

11. **Remarks**: This EO may be conducted as many as four times during Proficiency Level Four training.

**PERSONAL FITNESS AND HEALTHY LIVING**

1. **PO X04 – Track Participation in Physical Activities**

   This PO and its associated EOs are located in A-CR-CCP-801/PG-001, *Royal Canadian Air Cadets Proficiency Level One Qualification Standard and Plan*.

THIS PAGE INTENTIONALLY LEFT BLANK

## PHYSICAL ACTIVITIES

1. **PO X05– Participate in Physical Activities**

   This PO and its associated EOs are located in A-CR-CCP-801/PG-001, *Royal Canadian Air Cadets Proficiency Level One Qualification Standard and Plan*.

THIS PAGE INTENTIONALLY LEFT BLANK

**PO 406**

1. **Performance**: Fire the Cadet Air Rifle During Recreational Marksmanship

2. **Conditions**:

   a. Given:

      (1) Cadet air rifle,

      (2) Cadet air rifle sling,

      (3) Air rifle pellets,

      (4) Target frame,

      (5) Suitable target,

      (6) Shooting mat,

      (7) Safety glasses / goggles,

      (8) Supervision, and

      (9) Assistance as required.

   b. Denied: Nil.

   c. Environmental: Air rifle range constructed IAW Chapter 1, Section 8 of A-CR-CCP-177/PT-001, *Canadian Cadet Movement: Cadet Marksmanship Program Reference Manual*.

3. **Standard**: IAW A-CR-CCP-177/PT-001, *Canadian Cadet Movement: Cadet Marksmanship Program Reference Manual*, the cadet will fire the cadet air rifle during recreational marksmanship by:

   a. carrying out safety precautions;

   b. applying basic marksmanship techniques; and

   c. following the rules and commands given on a range.

4. **Remarks**: All range practices must be conducted by a Range Safety Officer (Air Rifle) (RSO AR).

5. **Complementary Material**:

   a. Complementary material associated with PO 406 is designed to provide opportunities for cadets to act as a range assistant, specifically:

      (1) EO C406.01 (Assist the Range Safety Officer [RSO]), and

      (2) EO C406.02 (Score Air Rifle Marksmanship Targets).

   b. Some complementary training offered in previous proficiency levels may be selected as complementary training in Proficiency Level Four, specifically:

      (1) EO C306.01 (Identify Civilian Marksmanship Organizations),

      (2) EO C306.02 (Correct Marksmanship Error),

      (3) EO C306.03 (Adopt the Standing Position With the Cadet Air Rifle), and

      (4) EO C106.01 (Participate in a Recreational Marksmanship Activity).

c. When selecting complementary material from previous proficiency levels, training staff shall review the applicable performance objective, lesson specification, and instructional guide.

d. Squadrons choosing EO C306.03 (Adopt the Standing Position with the Cadet Air Rifle) in either the Proficiency Level Three or Four Programs may follow this training with EO C106.01 (Participate in a Recreational Air Rifle Marksmanship Activity) from the standing position.

e. Squadrons choosing to instruct EO C406.01 (Perform the Duties of a Range Assistant) should allow cadets to fill roles on the range during air rifle marksmanship practices.

**EO M406.01**

1. **Performance**: Participate in a Recreational Marksmanship Activity

2. **Conditions**:

   a. Given:

      (1) Cadet air rifle,

      (2) Cadet air rifle sling,

      (3) Air rifle pellets,

      (4) Target frame,

      (5) Target,

      (6) Shooting mat,

      (7) Safety glasses / goggles,

      (8) Supervision, and

      (9) Assistance as required.

   b. Denied: Nil.

   c. Environmental: Air rifle range constructed IAW Part 1, Section 8 of A-CR-CCP-177/PT-001.

3. **Standard**: The cadet shall participate in a recreational marksmanship activity.

4. **Teaching Points**:

   a. Conduct a range briefing, to include:

      (1) explaining pertinent sections of range standing orders;

      (2) reviewing general rules observed on all ranges;

      (3) reviewing commands used on an air rifle range;

      (4) describing the layout of the range; and

      (5) reviewing hand-washing procedures on completion of firing.

   b. Supervise the cadet's participation in a recreational marksmanship activity, choosing from the following categories:

      (1) classification,

      (2) fun activities,

      (3) timed activities, and

      (4) competitive team / individual activities.

5. **Time**:

| | | |
|---|---|---|
| a. | Introduction / Conclusion: | 10 min |
| b. | Practical Activity: | 80 min |
| c. | Total: | 90 min |

6. **Substantiation**: A practical activity was chosen for this lesson as it is an interactive way to allow the cadets to experience recreational marksmanship in a safe and controlled environment. This activity contributes to the development of marksmanship skills and knowledge in a fun and challenging setting.

7. **References**:

   a. A0-027 A-CR-CCP-177/PT-001 Director Cadets 3. (2005). *Canadian cadet movement: Cadet marksmanship program reference manual*. Ottawa, ON: Department of National Defence.

   b. A0-041 CATO 14-41 Director Cadets 4. (2007). *Marksmanship, rifles and ammunition*. Ottawa ON: Department of National Defence.

8. **Training Aids**:

   a. Cadet air rifle,

   b. Cadet air rifle sling,

   c. Air rifle pellets,

   d. Target frame,

   e. Target,

   f. Shooting mat,

   g. Safety glasses / goggles,

   h. Stopwatch, and

   i. Pen / pencil.

9. **Learning Aids**:

   a. Cadet air rifle,

   b. Cadet air rifle sling,

   c. Air rifle pellets,

   d. Target frame,

   e. Target,

   f. Shooting mat, and

   g. Safety glasses / goggles.

10. **Test Details**: Nil.

11. **Remarks**:

a. Hand-washing stations must be available for cleanup after the activity is completed.

b. Cadets may fire in the standing position if they have previously received the training during C306.03 (Adopt the Standing Position With the Cadet Air Rifle).

c. Squadrons choosing to instruct EO C406.01 (Assist the Range Safety Officer) should allow cadets to fill these roles during air rifle marksmanship activities.

d. This activity provides opportunities for cadets to complete a leadership assignment as outlined in PO 403 (Act as a Team Leader).

THIS PAGE INTENTIONALLY LEFT BLANK

**EO C406.01**

1. **Performance**: Assist the Range Safety Officer (RSO)

2. **Conditions**:

   a. Given:

      (1) Supervision, and

      (2) Assistance as required.

   b. Denied: Nil.

   c. Environmental: Air rifle range constructed IAW Chapter 1, Section 8 of A-CR-CCP-177/PT-001, *Canadian Cadet Movement: Cadet Marksmanship Program Reference Manual*.

3. **Standard**: The cadet shall assist the RSO, to include:

   a. setting up and dismantling an air rifle range;

   b. acting as the pellet controller;

   c. acting as a range sentry;

   d. acting as a firing point assistant; and

   e. scoring targets.

4. **Teaching Points**:

| TP | Description | Method | Time | Refs |
|---|---|---|---|---|
| TP1 | Discuss ways to assist the RSO, to include:<br>a. setting up an air rifle range, to include:<br>(1) posting warning signals;<br>(2) setting up equipment at the backstop;<br>(3) indicating firing lanes;<br>(4) placing equipment at the firing point;<br>(5) placing equipment behind the firing point; and<br>(6) placing the cadet air rifle at the firing point; and<br>b. dismantling an air rifle range, to include:<br>(1) storing the cadet air rifle;<br>(2) storing the equipment behind the firing point;<br>(3) storing the equipment at the firing point;<br>(4) cleaning the backstop area; | Group Discussion | 25 min | A0-027 (pp. 1-9-1 to 1-8-3, pp. 4-4-14 to 4-4-16)<br>A0-041 (pp. E1-1/8 to E1-8/8) |

| TP | Description | Method | Time | Refs |
|---|---|---|---|---|
| | (5) cleaning the firing lanes; and<br>(6) removing the warning signals;<br>c. controlling pellets, to include:<br>(1) maintaining possession of the pellets at all times;<br>(2) distributing pellets;<br>(3) disposing of pellets;<br>(4) recording the number of pellets used during the activity; and<br>(5) recording the number of pellets used for each rifle;<br>d. performing the role of a range sentry, to include:<br>(1) restricting access to the range during firing;<br>(2) controlling range warning signals; and<br>(3) notifying the RSO of safety concerns inside / outside the range area;<br>e. assisting on the firing point, to include:<br>(1) supervising firers responding to range commands;<br>(2) assisting firers as necessary;<br>(3) correcting errors; and<br>(4) notifying the RSO of safety concerns; and<br>f. scoring targets. | | | |

5. **Time**:

| | | |
|---|---|---|
| a. | Introduction / Conclusion: | 5 min |
| b. | Group Discussion: | 25 min |
| c. | Total: | 30 min |

6. **Substantiation**: A group discussion was chosen for this lesson as it allows the cadets to interact with their peers and share their knowledge, experiences, opinions, and feelings about assisting the RSO. Sharing in the discussion encourages the cadet to examine their own thoughts and feelings and may prompt them to re-examine their previously held ideas. Participating in a group discussion improves the cadets' listening skills and team development.

7. **References**:

   a. A0-027 A-CR-CCP-177/PT-001 Director Cadets 3. (2005). *Cadet marksmanship program: Reference manual*. Ottawa, ON: Department of National Defence.

   b. A0-041 CATO 14-41 Director Cadets 4. (2009). *Authorized rifle training*. Ottawa, ON: Department of National Defence.

8. **Training Aids**: Nil.

9. **Learning Aids**: Assist the RSO handout.

10. **Test Details**: Nil.

11. **Remarks**: Cadets will assist the RSO during marksmanship activities, specifically EO M406.01 (Participate in a Recreational Marksmanship Activity) and EO C106.01 (Participate in a Recreational Marksmanship Activity).

THIS PAGE INTENTIONALLY LEFT BLANK

**EO C406.02**

1. **Performance**: Score Air Rifle Marksmanship Targets

2. **Conditions**:

   a. Given:

      (1) Exercise targets,

      (2) Air rifle grouping template,

      (3) .177 scoring magnifier,

      (4) Supervision, and

      (5) Assistance as required.

   b. Denied: Nil.

   c. Environmental: Classroom or training area large enough to accommodate the entire group.

3. **Standard**: The cadet shall score air rifle marksmanship targets, to include:

   a. grouping targets, and

   b. competition targets.

4. **Teaching Points**:

| TP | Description | Method | Time | Refs |
|---|---|---|---|---|
| TP1 | Describe air rifle marksmanship targets, to include:<br>a. CCM air rifle grouping targets,<br>b. CCM competition targets, and<br>c. non-standard targets. | Interactive Lecture | 5 min | A0-027 (p. 1-9-1) |
| TP2 | Explain, demonstrate and have the cadets score the CCM Air Rifle Grouping Target by:<br>a. determining there are five shots in the grouping;<br>b. aligning the air rifle grouping template over the five-shot grouping so that all shots are within a scoring ring;<br>c. determining if the grouping will fit within the next smallest ring without touching the scoring ring;<br>d. repeating as required until the grouping will not fit within the next smallest scoring ring without touching the scoring ring;<br>e. recording the grouping size on the target; and<br>f. determining the classification category. | Demonstration and Performance | 10 min | A0-027 (pp. 1-9-1 to 1-9-2) |

| TP | Description | Method | Time | Refs |
|---|---|---|---|---|
| TP3 | Explain, demonstrate and have the cadets score the CCM Competition Target by:<br>a. determining the score on each diagram by:<br>(1) determining the value by inspecting with the naked eye; and<br>(2) determining the value using the .177-scoring magnifier by:<br>(a) aligning a scoring magnifier over the pellet hole;<br>(b) awarding the higher value where a shot touches a scoring ring or breaks a scoring ring; and<br>(c) awarding the lower value where a gap exists between the shot and a scoring ring;<br>b. calculating any penalties; and<br>c. recording the score on the target.<br>Note: If scoring plugs and templates are required to determine a value, they shall be used under the supervision of an Air Rifle Marksmanship Instructor / Air Rifle Range Safety Officer. | Demonstration and Performance | 10 min | A0-027 (pp. 1-9-2 to 1-9-4) |

5. **Time**:

| | | |
|---|---|---|
| a. | Introduction / Conclusion: | 5 min |
| b. | Interactive Lecture: | 5 min |
| c. | Demonstration and Performance: | 20 min |
| d. | Total: | 30 min |

6. **Substantiation**:

a. An interactive lecture was chosen for TP 1 to orient the cadets to the targets used during air rifle marksmanship activities and to generate interest.

b. A demonstration and performance was chosen for TPs 2 and 3 as it allows the instructor to explain and demonstrate scoring grouping and competition targets while providing an opportunity for the cadets to practice under supervision.

7. **References**: A0-027 A-CR-CCP-177/PT-001 Director Cadets 3. (2005). *Cadet marksmanship program: Reference manual*. Ottawa, ON: Department of National Defence.

8. **Training Aids**:

a. Presentation aids (eg, whiteboard / flip chart / OHP) appropriate for classroom / training area,

b. Exercise targets,

c. Air rifle grouping template, and

d. .177 scoring magnifier.

9. **Learning Aids**:

a. Exercise targets,

b. Air rifle grouping template,

c. .177 scoring magnifier, and

d. Pencil.

10. **Test Details**: Nil.

11. **Remarks**: Nil.

THIS PAGE INTENTIONALLY LEFT BLANK

**PO 407**

1. **Performance**: Serve in an Air Cadet Squadron

2. **Conditions**:

   a. Given:

      (1) Supervision, and

      (2) Assistance as required.

   b. Denied: Nil.

   c. Environmental: Classroom or training area large enough to accommodate the entire group.

3. **Standard**: The cadet will serve in an air cadet squadron, to include:

   a. participating in year four training; and

   b. exploring year four CSTC training opportunities.

4. **Remarks**:

   a. EO M407.01 (Discuss Proficiency Level Four Training Opportunities) shall be conducted at the beginning of the training year.

   b. EO M407.02 (Discuss Year Four Cadet Summer Training Centre [CSTC] Training Opportunities) shall be conducted prior to the CSTC application deadline.

5. **Complementary Material**:

   a. Complementary material associated with PO 407 is designed to enhance the cadet's knowledge of serving in an air cadet squadron through a number of activities such as EO C407.01 (Prepare for a Merit Review Board).

   b. Some complementary training offered in previous levels may be selected as complementary training in year four, specifically:

      (1) EO C307.01 (Participate in a Presentation Given by a Guest Speaker From the Regional Cadet Support Unit [RCSU]),

      (2) EO C307.02 (Participate in a Presentation Given by the Cadet Liaison Officer [CLO]),

      (3) EO C307.03 (Participate in a Presentation Given by a Guest Speaker from the Air Cadet League of Canada [ACLC]),

      (4) EO C307.04 (Identify the Application Procedure for the Glider and Power Pilot Scholarships), and

      (5) EO C307.05 (Participate in a Presentation on the Duke of Edinburgh Award Program).

THIS PAGE INTENTIONALLY LEFT BLANK

**EO M407.01**

1. **Performance**: Discuss Proficiency Level Four Training Opportunities

2. **Conditions**:

   a. Given:

      (1) Handout of performance objectives (POs) and enabling objectives (EOs) of Proficiency Level Four training opportunities,

      (2) Supervision, and

      (3) Assistance as required.

   b. Denied: Nil.

   c. Environmental: Classroom or training area large enough to accommodate the entire group.

3. **Standard**: The cadet shall:

   a. discuss Proficiency Level Four mandatory training, to include:

      (1) common training, and

      (2) air elemental training;

   b. discuss Proficiency Level Four complementary training; and

   c. discuss leadership appointment opportunities.

4. **Teaching Points**:

| TP | Description | Method | Time | Refs |
|---|---|---|---|---|
| TP1 | Conduct an in-class activity to identify Proficiency Level Four mandatory training opportunities, to include:<br>a. training common to the sea, army, and air elements of the CCO, to include:<br>(1) community service,<br>(2) leadership,<br>(3) personal fitness and healthy living,<br>(4) recreational sports,<br>(5) air rifle marksmanship,<br>(6) general cadet knowledge,<br>(7) drill, and<br>(8) instructional techniques; and<br>b. air elemental training, to include:<br>(1) CF familiarization,<br>(2) aviation subjects, | In-Class Activity | 10 min | A0-096<br>A3-064 |

| TP | Description | Method | Time | Refs |
|---|---|---|---|---|
| | (3) aerospace, and<br>(4) aircrew survival. | | | |
| TP2 | Identify Proficiency Level Four complementary training opportunities. | Interactive Lecture | 10 min | See Remarks para. 11 (a). |
| TP3 | Discuss leadership appointment opportunities at the squadron. | Group Discussion | 5 min | |

5. **Time**:

| | | |
|---|---|---|
| a. | Introduction / Conclusion: | 5 min |
| b. | In-Class Activity: | 10 min |
| c. | Interactive Lecture: | 10 min |
| d. | Group Discussion: | 5 min |
| e. | Total: | 30 min |

6. **Substantiation**:

a. An in-class activity was chosen for TP 1 as it is an interactive way to provoke thought and stimulate interest among the cadets.

b. An interactive lecture was chosen for TP 2 to orient the cadets to and generate interest in Proficiency Level Four complementary training opportunities.

c. A group discussion was chosen for TP 3 as it allows the cadets to interact with their peers and share their knowledge, experiences, opinions, and feelings about leadership appointments at the squadron.

7. **References**:

a. A0-096 CATO 11-04 Director Cadets 3. (2007). *Cadet program outline*. Ottawa, ON: Department of National Defence.

b. A3-064 CATO 51-01 Director Cadets 3. (2008). *Air cadet program outline*. Ottawa, ON: Department of National Defence.

8. **Training Aids**:

a. Presentation aids (eg, whiteboard / flip chart / OHP / multimedia projector) appropriate for the classroom / training area,

b. Handouts of the POs and EOs for Proficiency Level Four training, and

c. Tape.

9. **Learning Aids**: Handouts of the POs and EOs for Proficiency Level Four training.

10. **Test Details**: Nil.

11. **Remarks**:

a. For Proficiency Level Four complementary training opportunities in TP 2, refer to the squadron's annual training plan.

b. This EO should be scheduled as early as possible in the training year. See the sample schedule located at Chapter 2, Annex C.

THIS PAGE INTENTIONALLY LEFT BLANK

**EO M407.02**

1. **Performance**: Discuss Year Four Cadet Summer Training Centre (CSTC) Training Opportunities

2. **Conditions**:

   a. Given:

      (1) Supervision, and

      (2) Assistance as required.

   b. Denied: Nil.

   c. Environmental: Classroom or training area large enough to accommodate the entire group.

3. **Standard**: The cadet shall discuss year four CSTC training opportunities, to include:

   a. areas of interest,

   b. courses within each area of interest,

   c. prerequisites for the courses within each area of interest,

   d. staff cadet advanced training, and

   e. the choices for year four CSTC training opportunities.

4. **Teaching Points**:

| TP | Description | Method | Time | Refs |
|---|---|---|---|---|
| TP1 | Discuss the areas of interest of CSTC training opportunities, to include:<br>a. fitness and sports,<br>b. music,<br>c. marksmanship,<br>d. leadership,<br>e. aviation,<br>f. aviation technology,<br>g. aerospace,<br>h. aircrew survival, and<br>i. staff cadet advanced training. | Group Discussion | 10 min | A0-010<br>A0-033<br>A0-128<br>A3-029<br>A3-061<br>A3-192 |
| TP2 | Explain the choices for year four CSTC training opportunities, to include:<br>a. all six-week courses offered within each area of common interest,<br>b. all six-week courses offered within each elemental-specific area, | Interactive Lecture | 15 min | A0-010<br>A0-033<br>A3-029 |

| TP | Description | Method | Time | Refs |
|---|---|---|---|---|
| | c. the three-week Advanced Aviation Course, and<br>d. prerequisites for each six-week course. | | | |

5. **Time**:

| | | |
|---|---|---|
| a. | Introduction / Conclusion: | 5 min |
| b. | Group Discussion: | 10 min |
| c. | Interactive Lecture: | 15 min |
| d. | Total: | 30 min |

6. **Substantiation**:

a. A group discussion was chosen for TP 1 as it allows the cadets to interact with their peers and share their experiences, opinions, and feelings about year four CSTC training opportunities.

b. An interactive lecture was chosen for TP 2 to orient the cadets to the choices for year four CSTC training opportunities and to generate interest in the subject.

7. **References**:

a. A0-010 CATO 11-04 Director Cadets 2. (2007). *Cadet program outline*. Ottawa, ON: Department of National Defence.

b. A0-128 CATO 13-28 Director Cadets 2. (2006). *Advanced training–Staff cadets*. Ottawa, ON: Department of National Defence.

c. A3-029 CATO 51-01 Director Cadets 3. (2006). *Air cadet program outline*. Ottawa, ON: Department of National Defence.

d. A3-061 CATO 54-27 Director Cadets 4. (2007). *Power pilot scholarship program*. Ottawa: ON: Department of National Defence.

e. A3-192 CATO 54-26 Director Cadets 4. (2007). *Glider Pilot Scholarship Program*. Ottawa, ON: Department of National Defence.

8. **Training Aids**: Presentation aids (eg, whiteboard / flip chart / OHP / multimedia projector) appropriate for the classroom / training area.

9. **Learning Aids**: Nil.

10. **Test Details**: Nil.

11. **Remarks**:

a. This EO should be conducted before the summer training application deadline.

b. It is recommended that the summer training application forms be completed during a training session after this EO has been conducted.

**EO C407.01**

1. **Performance**: Prepare for a Merit Review Board

2. **Conditions**:

   a. Given:

      (1) Supervision, and

      (2) Assistance as required.

   b. Denied: Nil.

   c. Environmental: Classroom or training area large enough to accommodate the entire group.

3. **Standard**: The cadet shall prepare for a merit review board by:

   a. identifying occasions requiring merit review boards;

   b. describing the preparation process for a merit review board for promotion; and

   c. participating in a practice merit review board based on a scenario.

4. **Teaching Points**:

| TP | Description | Method | Time | Refs |
|---|---|---|---|---|
| TP1 | Identify occasions requiring a merit review board, to include selection of recipients for:<br>a. promotions,<br>b. awards,<br>c. Cadet Summer Training Centre (CSTC) training opportunities,<br>d. CSTC staff appointments, and<br>e. scholarships. | Interactive Lecture | 5 min | A3-006<br>A0-133<br>C0-416 |
| TP2 | Describe:<br>a. how to prepare for a merit review board for promotion; and<br>b. tips for a successful interview.<br>Note: Cadets will prepare for an example practice merit review board for promotion at the end of this TP. | Interactive Lecture | 20 min | A3-006<br>A0-133 |
| TP3 | Have the cadets participate in a practice merit review board based on the instructions given in TP 2. | In-Class Activity | 55 min | A0-133 |

5. **Time**:

| | | |
|---|---|---|
| a. | Introduction / Conclusion: | 10 min |
| b. | Interactive Lecture: | 25 min |
| c. | In-Class Activity: | 55 min |
| d. | Total: | 90 min |

6. **Substantiation**:

   a. An interactive lecture was chosen for TPs 1 and 2 to present preparations for merit review boards and to summarize the teaching points.

   b. An in-class activity was chosen for TP 3 as it is an interactive way to provoke thought and stimulate interest among the cadets.

7. **References**:


   a. A0-133 CATO 13-02 Director Cadets 3. (2008). *Cadet rank promotions*. Ottawa, ON: Department of National Defence.

   b. A3-006 CATO 55-04 Director Cadets 3. (2005). *Air cadet dress instructions*. Ottawa, ON: Department of National Defence.

   c. C0-416 Air Cadet League of Canada BC Committee (2009). *Sponsoring committee resources: Mock boards*. Retrieved March 4, 2009, from http://www.aircadetleague.bc.ca/SponCommResources/Mock_Boards.PDF


8. **Training Aids**: Presentation aids (eg, whiteboard / flip chart / OHP / multimedia projector) appropriate for the classroom / training area.

9. **Learning Aids**: Nil.

10. **Test Details**: Nil.

11. **Remarks**:

   a. Cadets will be given scenarios to prepare for a merit review board at the end of TP 2.

   b. Some nationally directed and regionally directed activities may periodically require merit review boards.

   c. When scheduling this lesson, allow at least two weeks between TPs 2 and 3.

   d. For cadets interested after TP1 (e), M307.03 (Recognize the Partnership Between the Air Cadet League of Canada [ACLC] and DND) includes information on cadet scholarships provided for by the ACLC.

**PO 408**

1. **Performance**: Command a Flight on Parade

2. **Conditions**:

   a. Given:

      (1) Parade sequence aide-mémoire, and

      (2) Supervision.

   b. Denied: Assistance.

   c. Environmental: Drill hall or outdoor parade square in favourable weather.

3. **Standard**: IAW A-PD-201-000/PT-000, *The Canadian Forces Manual of Drill and Ceremonial*, the cadet will command a flight on parade, to include:

   a. executing correct and sharp drill movements;

   b. following a parade sequence;

   c. delivering words of command by:

      (1) applying vocal techniques; and

      (2) using the following parts of the command:

         (a) cautionary, and

         (b) executive; and

      (3) calling on the correct foot;

   d. demonstrating confidence; and

   e. correcting errors as required.

4. **Remarks**: Nil.

5. **Complementary Material**:

   a. Complementary material associated with PO 408 is designed to provide a historical background about drill as well as allow additional opportunities for cadet squadrons with an interest in drill to develop the cadets' skills in this area, specifically:

      (1) EO C408.01 (Discuss the History of Drill), and

      (2) EO C408.02 (View a Re-Enactment that Demonstrates the History of Drill).

   b. Some complementary training offered in previous proficiency levels may be selected as complementary training in the Proficiency Level Four Program, specifically:

      (1) EO C308.01 (Execute Flag Party Drill),

      (2) EO C308.02 (Deliver Words of Command),

(3) EO C208.01 (Practice Ceremonial Drill as a Review), and

(4) EO C208.02 (Execute Drill With Arms).

c. When selecting complementary material from previous proficiency levels, training staff will review the applicable performance objective, lesson specification and instructional guide.

**EO M408.01**

1. **Performance**: Discuss Commanding a Flight on Parade

2. **Conditions**:

   a. Given:

      (1) Supervision, and

      (2) Assistance as required.

   b. Denied: Nil.

   c. Environmental: Classroom or training area large enough to accommodate the entire group.

3. **Standard**: The cadet, as a member of a group, shall discuss commanding a flight on parade, to include:

   a. communicating effectively;

   b. executing sharp personal drill;

   c. maintaining dress IAW dress instructions;

   d. exhibiting a positive attitude; and

   e. conducting oneself in an appropriate manner.

4. **Teaching Points**:

| TP | Description | Method | Time | Refs |
|---|---|---|---|---|
| TP1 | Discuss commanding a flight on parade, to include:<br>a. communicating effectively;<br>b. executing sharp personal drill;<br>c. maintaining dress IAW dress instructions;<br>d. exhibiting a positive attitude; and<br>e. conducting oneself in an appropriate manner. | Group Discussion | 25 min | A0-002 (p. 1-1-1, pp. 1-1-3 to 1-1-8)<br>A3-006 |

5. **Time**:

   a. Introduction / Conclusion: 5 min

   b. Group Discussion: 25 min

   c. Total: 30 min

6. **Substantiation**: A group discussion was chosen for this lesson as it allows the cadets to interact with their peers and share their knowledge and opinions about commanding a flight on parade. Sharing in the discussion encourages the cadets to examine their own thoughts and feelings and may prompt them to re-examine their previously held ideas. Participating in a group discussion improves the cadets' listening skills and team development.

7. **References**:

   a. A0-002 A-PD-201-000/PT-000 Director History and Heritage 3-2. (2005). *The Canadian Forces manual of drill and ceremonial*. Ottawa, ON: Department of National Defence.

   b. A3-006 CATO 55-04 Director Cadets 3. (2005). *Air cadet dress instructions*. Ottawa, ON: Department of National Defence.

8. **Training Aids**: Presentation aids (eg, whiteboard / flip chart / OHP) appropriate for the classroom / training area.

9. **Learning Aids**: Nil.

10. **Test Details**: Nil.

11. **Remarks**: Nil.

**EO M408.02**

1. **Performance**: Identify Parade Sequence

2. **Conditions**:

   a. Given:

      (1) Supervision, and

      (2) Assistance as required.

   b. Denied: Nil.

   c. Environmental: Classroom or training area large enough to accommodate the entire group.

3. **Standard**: The cadet shall identify the sequence of the following parades:

   a. parade night, and

   b. annual ceremonial review (ACR).

4. **Teaching Points**:

| TP | Description | Method | Time | Refs |
|---|---|---|---|---|
| TP1 | Discuss the roles of the following parades within the Cadet Program:<br>a. parade night,<br>b. ACR,<br>c. Remembrance Day, and<br>d. special ceremonial parades. | Interactive Lecture | 5 min | A0-002 (p. 1-2-7, p. 2-6, pp. 11-1-2 to 11-1-3, p. 11-2-10, pp. 12-1-1 to 12-1-2) |
| TP2 | Describe the parade night sequence, to include:<br>a. opening parade, to include:<br>(1) forming up;<br>(2) calling the roll;<br>(3) inspecting;<br>(4) marching past;<br>(5) making announcements; and<br>(6) dismissing; and<br>b. closing parade, to include:<br>(1) forming up;<br>(2) making announcements;<br>(3) advancing in review order; and<br>(4) dismissing. | Interactive Lecture | 10 min | A0-002 (pp. 2-1 to 2-26, pp. 2-10 to 2-29, pp. 3-1 to 3-9, pp. 3-15 to 3-19, pp. 3-24 to 3-26, pp. 3-29 to 3-32, pp. 7-1-1 to 8-7-4) |
| TP3 | Describe the ACR sequence, to include:<br>a. form up;<br>b. reception of the reviewing officer (RO); | Interactive Lecture | 10 min | A0-002 (pp. 7-1-1 to 8-7-4, p. 9-2-1) |

| TP | Description | Method | Time | Refs |
|---|---|---|---|---|
| | c. inspection by the RO;<br>d. march past;<br>e. awards and presentations;<br>f. address by the RO;<br>g. advance in review order;<br>h. departure of the RO; and<br>i. dismissal. | | | |

5. **Time**:

| | | |
|---|---|---|
| a. | Introduction / Conclusion: | 5 min |
| b. | Interactive Lecture: | 25 min |
| c. | Total: | 30 min |

6. **Substantiation**: An interactive lecture was chosen for this lesson to orient the cadets to the parade sequences of a parade night and an ACR.

7. **References**: A0-002 A-PD-201-000/PT-000 Director History and Heritage 3-2. (2005). *The Canadian Forces manual of drill and ceremonial*. Ottawa, ON: Department of National Defence.

8. **Training Aids**: Presentation aids (eg, whiteboard / flip chart / OHP) appropriate for the classroom / training area.

9. **Learning Aids**: Nil.

10. **Test Details**: Nil.

11. **Remarks**: Nil.

**EO M408.03**

1. **Performance**: Command a Squad

2. **Conditions**:

   a. Given:

      (1) Parade sequence aide-mémoire card,

      (2) Supervision, and

      (3) Assistance as required.

   b. Denied: Nil.

   c. Environmental: Drill hall or outdoor parade square in favourable weather.

3. **Standard**: The cadet shall command a squad, to include:

   a. assuming proper command position;

   b. delivering words of command by:

      (1) applying vocal techniques;

      (2) using the following parts of the command:

         (a) cautionary, and

         (b) executive;

      (3) calling on the correct foot; and

   c. paying compliments, as required.

4. **Teaching Points**:

| TP | Description | Method | Time | Refs |
|---|---|---|---|---|
| TP1 | Explain, demonstrate and have the cadets command a squad, to include:<br>a. falling in;<br>b. greeting the Reviewing Officer (RO) to complete the inspection;<br>c. leading the squad on the march past; and<br>d. falling out. | Demonstration and Performance | 25 min | A0-002 (pp. 7-2-1 to 7-2-9, pp. 7-3-2 to 7-3-38, p. 7-4-10, p. 7-4-17, p. 7-4-22, p. 9-2-4, pp. 9-2-9 to 9-2-10) |

5. **Time**:

   a. Introduction / Conclusion: 5 min

   b. Demonstration and Performance: 25 min

   c. Total: 30 min

6. **Substantiation**: A demonstration and performance was chosen for this lesson as it allows the instructor to explain and demonstrate the skill of commanding a squad while providing an opportunity for the cadets to practice the skill under supervision.

7. **References**: A0-002 A-PD-201-000/PT-000 Director History and Heritage 3-2. (2005). *The Canadian Forces manual of drill and ceremonial*. Ottawa, ON: Department of National Defence.

8. **Training Aids**: Parade Sequence Aide-Mémoire Card.

9. **Learning Aids**: Parade Sequence Aide-Mémoire Card.

10. **Test Details**: This EO is assessed IAW Chapter 3, Annex B, 408 PC.

11. **Remarks**: Where there are a large number of cadets, divide the group into two or three squads and rotate the cadets through as commanders.

**EO M408.04**

1. **Performance**: Inspect a Cadet on Parade

2. **Conditions**:

   a. Given:

      (1) Supervision, and

      (2) Assistance as required.

   b. Denied: Nil.

   c. Environmental: Drill hall or outdoor parade square in favourable weather.

3. **Standard**: The cadet shall inspect a cadet on parade, to include:

   a. evaluating dress; and

   b. correcting errors.

4. **Teaching Points**:

| TP | Description | Method | Time | Refs |
|---|---|---|---|---|
| TP1 | Conduct an activity where the cadets will, in groups of three, identify the correct way of wearing the cadet uniform by referring to elemental cadet dress instructions, to include:<br>a. headdress;<br>b. clothes on the upper body;<br>c. clothes on the lower body;<br>d. footwear; and<br>e. overall personal appearance. | In-Class Activity | 15 min | A3-006 |
| TP2 | Explain, demonstrate and have the cadets perform an individual inspection, to include:<br>a. inspecting the front of a cadet from head to toe;<br>b. inspecting the back of a cadet from head to toe; and<br>c. correcting errors verbally. | Demonstration and Performance | 35 min | A0-002 (p. 1-1-12, p. 7-3-17) |

5. **Time**:

   a. Introduction / Conclusion: 10 min

   b. In-Class Activity: 15 min

   c. Demonstration and Performance: 35 min

   d. Total: 60 min

6. **Substantiation**:

   a. An in-class activity was chosen for TP 1 as it is an interactive way to provoke thought and stimulate interest and confirm comprehension of elemental dress instructions.

   b. A demonstration and performance was chosen for TP 2 as it allows the instructor to explain and demonstrate the skill of inspecting a cadet on parade while providing an opportunity for the cadets to practice the skill under supervision.

7. **References**:

   a. A0-002 A-PD-201-000/PT-000 Director History and Heritage 3-2. (2005). *The Canadian Forces manual of drill and ceremonial*. Ottawa, ON: Department of National Defence.

   b. A3-006 CATO 55-04 Director Cadets 3. (2005). *Air cadet dress instructions*. Ottawa, ON: Department of National Defence

8. **Training Aids**:

   a. CATO 55-04, *Air Cadet Dress Instructions*, and

   b. Dress Instructions Activity Answer Sheet.

9. **Learning Aids**:

   a. CATO 55-04, *Air Cadet Dress Instructions*,

   b. Dress Instructions Activity Worksheet, and

   c. Pen / pencil.

10. **Test Details**: Nil.

11. **Remarks**: Nil.

**EO C408.01**

1. **Performance**: Discuss the History of Drill

2. **Conditions**:

   a. Given:

      (1) Supervision, and

      (2) Assistance as required.

   b. Denied: Nil.

   c. Environmental: Classroom or training area large enough to accommodate the entire group.

3. **Standard**: The cadet shall discuss the history of drill, to include:

   a. origins of drill,

   b. purposes of drill on the battlefield,

   c. evolution of drill procedures, and

   d. variance of drill between the three services before unification.

4. **Teaching Points**:

| TP | Description | Method | Time | Refs |
|---|---|---|---|---|
| TP1 | Discuss the origins of drill, to include:<br>a. Romans,<br>b. Greeks and Spartans, and<br>c. Chinese. | Interactive Lecture | 10 min | A0-002 (pp. 1-1-1 to 1-1-2)<br>C2-249 (pp. 102–121) |
| TP2 | Discuss the evolution of drill movements, to include:<br>a. Swiss,<br>b. Dutch,<br>c. Germans,<br>d. British, to include:<br>(1) march,<br>(2) quick march,<br>(3) wheeling step, and<br>(4) double march; and<br>e. Canadian, to include:<br>(1) Royal Canadian Navy,<br>(2) Canadian Army, and<br>(3) Royal Canadian Air Force. | Interactive Lecture | 15 min | A0-002 (p. 1-1-2)<br>C2-249 (pp. 127–145) |

5. **Time**:

| | | |
|---|---|---|
| a. | Introduction / Conclusion: | 5 min |
| b. | Interactive Lecture: | 25 min |
| c. | Total: | 30 min |

6. **Substantiation**: An interactive lecture was chosen for this lesson to orient the cadets to the history of drill and generate interest in the subject.

7. **References**:

   a. A0-002 A-PD-201-000/PT-000 Director History and Heritage 3-2. (2005). *The Canadian Forces manual of drill and ceremonial*. Ottawa, ON: Department of National Defence.

   b. C2-249 ISBN 978-0674-5023-07 McNeill, W. (1997). *Keeping together in time: Dance and drill in human history*. Cambridge, MA: Harvard University Press.

8. **Training Aids**: Presentation aids (eg, whiteboard / flip chart / OHP) appropriate for the classroom / training area.

9. **Learning Aids**: Nil.

10. **Test Details**: Nil.

11. **Remarks**: Nil.

**EO C408.02**

1. **Performance**: View a Re-Enactment That Demonstrates the History of Drill

2. **Conditions**:

   a. Given:

      (1) Re-enactment demonstrating the history of drill (live performance or video),

      (2) Supervision, and

      (3) Assistance as required.

   b. Denied: Nil.

   c. Environmental: Classroom or training area large enough to accommodate the entire group.

3. **Standard**: The cadet shall:

   a. view a re-enactment that demonstrates the history of drill; and

   b. participate in a group discussion comparing past military drill to current military drill.

4. **Teaching Points**: This EO offers an opportunity for the cadet to view and discuss a re-enactment that demonstrates the history of drill. This lesson shall be structured as follows:

   a. Brief the cadet, prior to the re-enactment, on the relevance of the history of drill, to include:

      (1) the purpose of drill on the battlefield; and

      (2) the evolution of drill throughout the years.

   b. View a re-enactment that demonstrates the history of drill.

   c. Conduct a group discussion in which the cadets discuss:

      (1) what they learned from the re-enactment;

      (2) what they felt was the most interesting aspect; and

      (3) what they found was different compared to drill today.

5. **Time**:

| | | |
|---|---|---|
| a. | Introduction / Conclusion: | 10 min |
| b. | In-Class Activity / Field Trip: | 60 min |
| c. | Group Discussion: | 20 min |
| d. | Total: | 90 min |

6. **Substantiation**:

   a. An in-class activity / field trip was chosen for TP 1 as it is an interactive way to stimulate interest in the history of drill.

   b. A group discussion was chosen for TP 2 as it allows the cadets to interact with their peers and share their knowledge and opinions about the history of drill. Sharing in the discussion encourages the cadets to examine their own thoughts and feelings and may prompt them to re-examine their previously held ideas. Participating in a group discussion improves the cadets' listening skills and team development.

7. **References**: Nil.

8. **Training Aids**:

   a. TV, as required, and

   b. DVD or VCR, as required.

9. **Learning Aids**: Nil.

10. **Test Details**: Nil.

11. **Remarks**:

   a. The historical drill re-enactment chosen can be an in-class activity (video or DVD) or a field trip (live performance).

   b. There is no instructional guide provided for this EO.

**PO 409**

1. **Performance**: Instruct a Lesson

2. **Conditions**:

   a. Given:

      (1) A lesson specification,

      (2) An instructional guide, and

      (3) Supervision.

   b. Denied: Assistance.

   c. Environmental: Classroom or training area large enough to accommodate the entire group.

3. **Standard**: The cadet will instruct a 30-minute lesson by:

   a. preparing the lesson;

   b. introducing the lesson;

   c. presenting the content of the lesson;

   d. confirming the knowledge / skills learned during the lesson; and

   e. concluding the lesson.

4. **Remarks**:

   a. The lessons assigned will be chosen from Proficiency Levels One and Two.

   b. It is recommended that this PO be conducted early in the training year to allow time for the cadets to instruct their assigned lessons to Proficiency Levels One and Two cadets.

5. **Complementary Material**:

   a. Complementary material associated with PO 409 is designed to enhance the cadet's ability to instruct a lesson through a number of activities:

      (1) EO C409.01 (Plan a Lesson),

      (2) EO C409.02 (Instruct a 30-Minute Lesson),

      (3) EO C409.03 (Act as an Assistant Instructor),

      (4) EO C409.04 (Participate in a Creative Lesson Planning Workshop),

      (5) EO C409.05 (Act as an Assistant Drill Instructor), and

      (6) EO C409.06 (Instruct a 30-Minute Drill Lesson)

b. Some complementary material offered in previous proficiency levels may be conducted as complementary training in Proficiency Level Four, specifically:

(1) EO C309.04 (Identify Formations for Drill Instruction),

(2) EO C309.05 (Plan a Drill Lesson), and

(3) EO C309.06 (Instruct a 15-Minute Drill Lesson).

c. When selecting complementary training from previous proficiency levels, training staff will review the applicable performance objective, lesson specification and instructional guide.

**EO M409.01**

1. **Performance**: Identify Methods of Instruction

2. **Conditions**:

   a. Given:

      (1) Supervision, and

      (2) Assistance as required.

   b. Denied: Nil.

   c. Environmental: Classroom or training area large enough to accommodate the entire group.

3. **Standard**: The cadet shall:

   a. identify the following methods of instruction:

      (1) group discussion,

      (2) guided discussion,

      (3) role-play,

      (4) experiential learning,

      (5) problem-based learning, and

      (6) case study; and

   b. select an appropriate method of instruction for a given topic.

4. **Teaching Points**:

| TP | Description | Method | Time | Refs |
|---|---|---|---|---|
| TP1 | Conduct an activity where the cadets will review methods of instruction, to include:<br>a. interactive lecture,<br>b. demonstration and performance,<br>c. in-class activity,<br>d. practical activity,<br>e. game, and<br>f. field trip. | In-Class Activity | 10 min | A0-055 (pp. 17–22) |
| TP2 | Conduct an activity where the cadets will describe methods of instruction, to include:<br>a. group discussion,<br>b. guided discussion,<br>c. role-play,<br>d. experiential learning, | In-Class Activity | 20 min | A0-055 (p. 16, p. 19, p. 21)<br>A0-123 (pp. 5–17)<br>C0-379 |

| TP | Description | Method | Time | Refs |
|---|---|---|---|---|
| | e. problem-based learning, and<br>f. case study. | | | |
| TP3 | Conduct a group discussion on the application of methods of instruction, to include:<br>a. interactive lecture,<br>b. demonstration and performance,<br>c. in-class activity,<br>d. practical activity,<br>e. game,<br>f. field trip,<br>g. group discussion,<br>h. guided discussion,<br>i. role-play,<br>j. experiential learning,<br>k. problem-based learning, and<br>l. case study | Group Discussion | 20 min | A0-055 (pp. 17–22)<br>A0-123 (p. 3) |

5. **Time**:

| | | |
|---|---|---|
| a. | Introduction / Conclusion: | 10 min |
| b. | In-Class Activity: | 30 min |
| c. | Group Discussion: | 20 min |
| d. | Total: | 60 min |

6. **Substantiation**:

a. An in-class activity was chosen for TPs 1 and 2 as it is an interactive way to review previously learned material and confirm the cadets' comprehension of new methods of instruction.

b. A group discussion was chosen for TP 3 as it allows the cadets to interact with their peers and share their knowledge, experiences, opinions and feelings about the application of various methods of instruction.

7. **References**:

a. A0-055 A-P9-050-000/PT-006 Director Training and Education Policy. (2002). *Canadian Forces individual training and education system* (Vol. 6). Ottawa, ON: Department of National Defence.

b. A0-123 A-PD-050-001-PF-001 Chief of Defence Staff. (2001). *Central flying school flight instructors handbook*. Winnipeg, MB: Department of National Defence.

c. C0-379 Kizlik, R. (2009). *Education Information for new and future teachers*. Retrieved February 26, 2009 from www.adprima.com

8. **Training Aids**:

   a. Presentation aids (eg, whiteboard / flip chart / OHP) appropriate for the classroom / training area,

   b. Teaching = learning handout,

   c. Methods of instruction worksheet,

   d. Methods of instruction puzzle,

   e. Methods of instruction guide,

   f. Methods of instruction information sheets,

   g. Methods worksheet,

   h. Method madness handout,

   i. Envelopes,

   j. Binder,

   k. Markers,

   l. Pen / pencil,

   m. Tape, and

   n. Stopwatch.

9. **Learning Aids**:

   a. Teaching = learning handout,

   b. Methods of instruction worksheet,

   c. Methods of instruction puzzle,

   d. Methods of instruction information sheets,

   e. Methods worksheet, and

   f. Method madness handout.

10. **Test Details**: This EO is assessed IAW Chapter 3, Annex B, 409 PC.

11. **Remarks**: Nil.

THIS PAGE INTENTIONALLY LEFT BLANK

**EO M409.02**

1. **Performance**: Identify Elements of a Positive Learning Environment

2. **Conditions**:

   a. Given:

      (1) Supervision, and

      (2) Assistance as required.

   b. Denied: Nil.

   c. Environmental: Classroom or training area large enough to accommodate the entire group.

3. **Standard**: The cadet shall identify elements of a positive learning environment, to include:

   a. physical and emotional safety;

   b. stress management; and

   c. classroom / training area management.

4. **Teaching Points**:

| TP | Description | Method | Time | Refs |
|---|---|---|---|---|
| TP1 | Describe the importance of a physically and emotionally safe learning environment. | Interactive Lecture | 15 min | A0-118 (p. 5, p. 7, p. D 1)<br>C0-376 (p. 39, p. 103)<br>C0-383<br>C0-385 |
| TP2 | Conduct a group discussion on stress management techniques, to include:<br>a. creating positive stress to encourage learning; and<br>b. controlling negative stress by:<br>(1) informing cadets of expectations;<br>(2) providing necessary resources;<br>(3) providing adequate time to accomplish tasks;<br>(4) incorporating physical activity;<br>(5) providing time to process information; and<br>(6) practicing relaxation techniques. | Group Discussion | 15 min | A0-055 (pp. 44–47)<br>A0-118 (p. 12, p. L 1)<br>C0-191 (p. 293, p. 294, p. 300, p.301)<br>C0-375<br>C0-380 (pp. 8.14–8.16, p. 4.4<br>C0-191 |

| TP | Description | Method | Time | Refs |
|---|---|---|---|---|
| TP3 | Identify classroom / training area management techniques, to include:<br>a. attention signals;<br>b. correcting behaviour;<br>c. providing positive reinforcement;<br>d. engaging the learner; and<br>e. managing distractions. | Interactive Lecture | 20 min | A0-055 (pp. 44–47)<br>C0-375 (p. 5.6, p. 5.7)<br>C0-381<br>C0-382<br>C0-384 |

5. **Time**:

| | | |
|---|---|---|
| a. | Introduction / Conclusion: | 10 min |
| b. | Interactive Lecture: | 35 min |
| c. | Group Discussion: | 15 min |
| d. | Total: | 60 min |

6. **Substantiation**:

a. An interactive lecture was chosen for TPs 1 and 3 to provoke thought and stimulate the cadets' interest in the importance of a physically and emotionally safe learning environment and a well-managed classroom / training area.

b. A group discussion was chosen for TP 2 as it allows the cadets to interact with their peers and share their knowledge, experiences, opinions and feelings about stress management.

7. **References**:

a. A0-055 A-P9-050-000/PT-006 Director Training and Education Policy. (2002). *Canadian Forces individual training and education system* (Vol. 6). Ottawa, ON: Department of National Defence.

b. A0-118 Director Cadets 3. (2007). *Youth reference guide*. Ottawa, ON: Department of National Defence.

c. C0-191 ISBN 978-0-7360-6675-4 Corbin, C. & Lindsey, R. (2007). *Fitness for life: Updated fifth edition*. Windsor: Human Kinetics.

d. C0-375 ISBN 978-1-879097-10-0 Kagan, S., & Kagan, M. (2009). *Kagan cooperative learning*. San Clemente, CA: Kagan Publishing.

e. C0-376 ISBN 0-7619-4626-8 Earle, L. M. (2003). *Assessment as learning*. Thousand Oaks, CA: Corwin Press, Inc.

f. C0-380 Scott, E. (2008). *Cortisol and stress: how to stay healthy*. Retrieved February 25, 2009, from http://www.Stress.about.com/od/stresshealth/a/cortisol.htm?p=1

g. C0-381 McDonald, E. (2006). *How to involve and engage students*. Retrieved March 4, 2009, from http://www.education-world.com/a_curr/columnists/mcdonald/mcdonald007.shtml

h. C0-382 Bear, TC. (2009). *Quiet signals for getting attention and control of your classroom*. Retrieved February 27, 2009, from http://www.teachercreated.com/blog/?tag=attention-signals

i. C0-383 Bell, A. (2007). *Creating a learning centered environment - Introduction*. Retrieved February 23, 2009, from http://www.dialogueonlearning.tc3.edu/model/environment/Introduction-grp.htm

j. C0-384 Handy, K. (2009). *Classroom management plan*. Retrieved February 27, 2009, from http://www.katiehandy.wordpress.com/classroom-management-plan/

k. C0-385 Boudreau, D. (2008). *Creating the ideal learning environment - Emotional*. Retrieved February 25, 2009, from http://ezinearticles.com/?Creating-the-Ideal-Learning-Environment---Emotional&id=1536435

8. **Training Aids**:

   a. Presentation aids (eg, whiteboard / flip chart / OHP) appropriate for the classroom / training area,

   b. Relaxation exercise handout,

   c. Create a positive learning environment crossword puzzle, and

   d. Create a positive learning environment crossword puzzle answer key.

9. **Learning Aids**:

   a. Relaxation exercise handout, and

   b. Create a positive learning environment crossword puzzle.

10. **Test Details**: This EO is assessed IAW Chapter 3, Annex B, 409 PC.

11. **Remarks**: Nil.

THIS PAGE INTENTIONALLY LEFT BLANK

**EO M409.03**

1. **Performance**: Describe Learner Needs

2. **Conditions**:

   a. Given:

      (1) Supervision, and

      (2) Assistance as required.

   b. Denied: Nil.

   c. Environmental: Classroom or training area large enough to accommodate the entire group.

3. **Standard**: The cadet shall describe:

   a. the importance of:

      (1) relevant and meaningful material, and

      (2) information processing time;

   b. types of learners using:

      (1) developmental periods, and

      (2) learning styles; and

   c. the needs of learners, specific to:

      (1) developmental periods, and

      (2) learning styles.

4. **Teaching Points**:

| TP | Description | Method | Time | Refs |
|---|---|---|---|---|
| TP1 | Describe the importance of:<br>a. making material relevant and meaningful; and<br>b. providing information processing time. | Interactive Lecture | 5 min | A0-118 (p. 10, p. G 1, p. G 2, p. K 1)<br>C0-397 (p. 1)<br>C0-398 (p. 31, p. 38) |
| TP2 | Describe and identify the needs of the developmental periods (DP), to include:<br>a. DP 1,<br>b. DP 2, and<br>c. DP 3. | Interactive Lecture | 10 min | A0-118 (pp. 5–7, p. 10, p. H 1, p. H 2 ) |

| TP | Description | Method | Time | Refs |
|---|---|---|---|---|
| TP3 | Conduct an activity where the cadets will describe and identify the needs of the different learning styles, to include:<br>a. visual,<br>b. kinaesthetic, and<br>c. auditory. | In-Class Activity | 20 min | A0-118 (pp. 5–7, p. 10, p. G 1, p. G 2, p. H 1, p. H 2, p. K 1) |
| TP4 | Conduct an activity where the cadets will describe how to structure a lesson to meet the needs of the different types of learners. | In-Class Activity | 15 min | A0-118 (p. 10, p. G 1, p. G 2, p. K 1) |

5. **Time**:

| | | |
|---|---|---|
| a. | Introduction / Conclusion: | 10 min |
| b. | Interactive Lecture: | 15 min |
| c. | In-Class Activity: | 35 min |
| d. | Total: | 60 min |

6. **Substantiation**:

a. An interactive lecture was chosen for TPs 1 and 2 to introduce, provoke thought and stimulate the cadets' interest in learner needs.

b. An in-class activity was chosen for TPs 3 and 4 as it is an interactive way to provoke thought and stimulate interest in the different types of learners and how to meet their needs.

7. **References**:

a. A0-118 Director Cadets 3. (2007). *Youth reference guide*. Ottawa, ON: Department of National Defence.

b. C0-397 Belding, S. (2004). *Stickiness: Skills retention and synthesis*. Retrieved March 23, 2009 from http://www.airs.org/files/public/Making_Training_Stick.pdf

c. C0-398 ISBN I-57517-344-1 Burke, K. (2000). *What to do with the kid who*.... Arlington Heights, IL: Skylight Professional Development.

8. **Training Aids**:

a. Presentation aids (eg, whiteboard / flip chart / OHP) appropriate for the classroom / training area,

b. Tiger comic slide,

c. Learning pyramid handout,

d. Developmental periods confirmation strips and answer key,

e. Learning styles information sheet,

f. Learning styles survey,

g. Instructions to make a jumping frog,

h. Instructions to make a triangle box,

i. Schoolies comic strip,

j. Instructor tips for learning styles worksheet,

k. Instructor tips for learning styles answer key,

l. Activities in Developmental Periods worksheet, and

m. Activities in Developmental Periods answer key.

n. Markers,

o. Pen / pencil,

p. Letter size paper,

q. Square sized sticky notes (eg, size 3 inches by 3 inches),

r. Sticky notes–4 inches by 6 inches, and

s. Stopwatch.

9. **Learning Aids**:

a. Learning pyramid handout,

b. Learning styles information sheet,

c. Learning styles survey,

d. Instructor tips for learning styles worksheet,

e. Activities in Developmental Periods worksheet, and

f. Letter size paper,

g. Square sized sticky notes (eg, size 3 inches by 3 inches), and

h. Sticky notes–4 inches by 6 inches.

10. **Test Details**: This EO is assessed IAW Chapter 3, Annex B, 409 PC.

11. **Remarks**: Nil.

THIS PAGE INTENTIONALLY LEFT BLANK

**EO M409.04**

1. **Performance**: Explain Assessment

2. **Conditions**:

   a. Given:

      (1) Supervision, and

      (2) Assistance as required.

   b. Denied: Nil.

   c. Environmental: Classroom or training area large enough to accommodate the entire group.

3. **Standard**: The cadet shall explain assessment, to include:

   a. types of assessment, and

   b. assessment instructions and instruments.

4. **Teaching Points**:

| TP | Description | Method | Time | Refs |
|---|---|---|---|---|
| TP1 | Explain types of assessment, to include:<br>a. assessment of learning, and<br>b. assessment for learning. | Interactive Lecture | 10 min | A3-191 (p. 3-1, p. 3-2)<br>C0-376 (pp. 21–28) |
| TP2 | Describe assessment instructions and instruments. | Interactive Lecture | 15 min | A3-191 (p. 3-3, p. 3-4, pp. 3B-1 to 3B-3, pp. 3B1-4 to 3B1-12) |

5. **Time**:

   a. Introduction / Conclusion: 5 min

   b. Interactive Lecture: 25 min

   c. Total: 30 min

6. **Substantiation**: An interactive lecture was chosen for this lesson as a way to introduce the cadets to assessment types, instructions and instruments, provoke thought and stimulate interest among cadets.

7. **References**:

   a. A3-191 A-CR-CCP-803/PG-001 Director Cadets 3. (2008). *Proficiency level three qualification standard and plan*. Ottawa, ON: Department of National Defence.

   b. C0-376 ISBN 0-7619-4626-8 Guskey, T., & Marzano, R. (2003). *Assessment as learning*. Thousand Oaks, CA: Corwin Press, Inc.

8. **Training Aids**:

   a. Presentation aids (eg, whiteboard / flip chart / OHP) appropriate for the classroom / training area, and

   b. Assessment handouts.

9. **Learning Aids**: Assessment handouts.

10. **Test Details**: This EO is assessed IAW Chapter 3, Annex B, 409 PC.

11. **Remarks**: Nil.

**EO M409.05**

1. **Performance**: Instruct a 30-Minute Lesson

2. **Conditions**:

   a. Given:

      (1) A lesson specification,

      (2) An instructional guide, and

      (3) Supervision.

   b. Denied: Assistance.

   c. Environmental: Classroom or training area large enough to accommodate the entire group.

3. **Standard**: The cadet shall instruct a 30-minute lesson by:

   a. preparing the lesson;

   b. introducing the lesson;

   c. presenting the content of the lesson;

   d. confirming the knowledge / skills learned during the lesson; and

   e. concluding the lesson.

4. **Teaching Points**: Have the cadets instruct a 30-minute lesson by:

   a. preparing the lesson;

   b. introducing the lesson;

   c. presenting the content of the lesson;

   d. confirming the knowledge / skills learned during the lesson; and

   e. concluding the lesson.

5. **Time**:

| | | |
|---|---|---|
| a. | Introduction / Conclusion: | 5 min |
| b. | Practical Activity: | 85 min |
| c. | Total: | 90 min |

6. **Substantiation**: A practical activity was chosen for this lesson as it is an interactive way for cadets to develop instructional skills in a safe and controlled environment.

7. **References**: Nil.

8. **Training Aids**: Instructional Techniques Assessment Form.

9. **Learning Aids**:

   a. Presentation aids (eg, whiteboard / flip chart / OHP) appropriate for the classroom / training area, and

   b. Instructional Techniques Assessment Form.

10. **Test Details**: This EO is assessed IAW Chapter 3, Annex B, 409 PC.

11. **Remarks**:

   a. There is no instructional guide for this EO.

   b. Additional instructions regarding the conduct and assessment of this EO are located in Chapter 3, Annex B, 409 PC.

   c. The cadets shall instruct Proficiency Level One or Proficiency Level Two cadets during a regular training session.

   d. The course officer shall communicate with the training officer to:

      (1) place the Proficiency Level Four cadets into the instructor schedule;

      (2) ensure the cadets are assigned a lesson at least one week prior to conducting this EO, to include:

         (a) a lesson specification, and

         (b) an instructional guide; and

      (3) adjust the period allocation for this EO if all three periods are not required for each Proficiency Level Four cadet to instruct a 30-minute lesson.

   e. Time for lesson planning for this EO is available in EO C409.01 (Plan a Lesson), should the course officer deem it necessary.

   f. Additional time for this EO is available in EO C409.02 (Instruct a 30-Minute Lesson).

**EO C409.01**

1. **Performance**: Plan a Lesson

2. **Conditions**:

   a. Given:

      (1) A lesson specification,

      (2) An instructional guide, and

      (3) Supervision.

   b. Denied: Nil.

   c. Environmental: Classroom or training area large enough to accommodate the entire group.

3. **Standard**: The cadet shall:

   a. research lesson content; and

   b. develop a lesson plan.

4. **Teaching Points**: Supervise and provide assistance while the cadets plan a lesson.

5. **Time**:

| | | |
|---|---|---|
| a. | Introduction / Conclusion: | 10 min |
| b. | Practical Activity: | 50 min |
| c. | Total: | 60 min |

6. **Substantiation**: A practical activity was chosen to allow the cadets to plan a lesson in a structured and controlled environment. This activity contributes to the development of lesson-planning skills and will serve as preparation for EO M409.05 (Instruct a 30-Minute Lesson).

7. **References**: Nil.

8. **Training Aids**: Nil.

9. **Learning Aids**:

   a. A lesson specification, and

   b. An instructional guide.

10. **Test Details**: Nil.

11. **Remarks**:

    a. This EO may be used as time to plan for EO M409.05 (Instruct a 30-Minute Lesson).

    b. This EO should be scheduled at least one week prior to EO M409.05 (Instruct a 30-Minute Lesson).

    c. There is no instructional guide for this EO.

THIS PAGE INTENTIONALLY LEFT BLANK

**EO C409.02**

1. **Performance**: Instruct a 30-Minute Lesson

2. **Conditions**:

   a. Given:

      (1) A lesson specification,

      (2) An instructional guide, and

      (3) Supervision.

   b. Denied: Assistance.

   c. Environmental: Classroom or training area large enough to accommodate the entire group.

3. **Standard**: The cadet shall instruct a 30-minute lesson by:

   a. preparing the lesson;

   b. introducing the lesson;

   c. presenting the content of the lesson;

   d. confirming the knowledge / skills learned during the lesson; and

   e. concluding the lesson.

4. **Teaching Points**: Have the cadets instruct a 30-minute lesson by:

   a. preparing the lesson;

   b. introducing the lesson;

   c. presenting the content of the lesson;

   d. confirming the knowledge / skills learned during the lesson; and

   e. concluding the lesson.

5. **Time**:

| | | |
|---|---|---|
| a. | Introduction / Conclusion: | 5 min |
| b. | Practical Activity: | 85 min |
| c. | Total: | 90 min |

6. **Substantiation**: A practical activity was chosen for this lesson as it is an interactive way for cadets to develop instructional skills in a safe and controlled environment.

7. **References**: Nil.

8. **Training Aids**: Instructional Techniques Assessment Form.

9. **Learning Aids**:

   a. Presentation aids (eg, whiteboard / flip chart / OHP) appropriate for the classroom / training area, and

   b. Instructional Techniques Assessment Form.

10. **Test Details**: Nil.

11. **Remarks**:

   a. There is no instructional guide for this EO.

   b. This EO may serve as additional time to complete EO M409.05 (Instruct a 30-Minute Lesson) or as additional time for the cadets to practice instruction.

   c. The cadets shall instruct Proficiency Level One or Proficiency Level Two cadets on a regular training session.

   d. The course officer shall communicate with the training officer to:

      (1) place the Proficiency Level Four cadets into the instructor schedule;

      (2) ensure the cadets are assigned a lesson at least one week prior to conducting this EO, to include:

         (a) a lesson specification, and

         (b) an instructional guide; and

      (3) the period allocation for this EO may be shortened if all three periods are not required for each Proficiency Level Four cadet to instruct a 30-minute lesson.

   e. Time for lesson planning for this EO is available in EO C409.01 (Plan a Lesson).

**EO C409.03**

1. **Performance**: Act as an Assistant Instructor

2. **Conditions**:

   a. Given:

      (1) Supervision, and

      (2) Assistance as required.

   b. Denied: Nil.

   c. Environmental: Classroom or training area large enough to accommodate the entire group.

3. **Standard**: The cadet shall act as an assistant instructor, to include:

   a. preparing training aids as required;

   b. helping instruct the lesson;

   c. supervising the cadets;

   d. providing assistance as required; and

   e. securing training aids as required.

4. **Teaching Points**: Have the cadets act as assistant instructors in on-the-job training (OJT), to include:

   a. preparing training aids as required;

   b. helping instruct the lesson;

   c. supervising the cadets;

   d. providing assistance as required; and

   e. securing training aids as required.

5. **Time**: OJT: 90 min

6. **Substantiation**: OJT was chosen for this lesson as it allows the cadets to assist instructing a lesson in a safe and controlled environment. The OJT experience provides the cadets a practical application of learned skills in a realistic setting. The cadets reflect on the experience and receive feedback on the performance, which helps to shape future experiences. The cadets develop a sense of responsibility from the OJT aiding their development as a leader.

7. **References**: Nil.

8. **Training Aids**: Nil.

9. **Learning Aids**: Presentation aids (eg, whiteboard / flip chart / OHP) appropriate for the classroom / training area.

10. **Test Details**: Nil.

11. **Remarks**:

    a. Prior to this EO, the course officer shall communicate with the training officer to ensure that cadets are paired with a Proficiency Level One, Two or Three instructor on a regular training session.

b. A number of factors may exist based on the size of the squadron that will not allow for all Proficiency Level Four cadets to be scheduled for this EO at the same time. In this circumstance, special consideration should be given to minimize the cadet's absence from other areas of training. For example, scheduling half of the cadets for this EO while the other half is scheduled for EO C440.02 (Launch a Small Model Rocket) and reversing the schedule for the following training session.

c. During this EO, the instructor shall:

(1) brief the cadet prior to commencing the lesson;

(2) assign the cadet tasks IAW Paragraph 3;

(3) monitor the cadet; and

(4) debrief the cadet at the end of the lesson.

**EO C409.04**

1. **Performance**: Participate in a Creative Lesson-Planning Workshop

2. **Conditions**:

   a. Given:

      (1) Supervision, and

      (2) Assistance as required.

   b. Denied: Nil.

   c. Environmental: Classroom or training area large enough to accommodate the entire group.

3. **Standard**: The cadet shall participate in a creative lesson-planning workshop.

4. **Teaching Points**:

| TP | Description | Method | Time | Refs |
|---|---|---|---|---|
| TP1 | Conduct an activity where the cadets will define creativity. | In-Class Activity | 15 min | C0-387<br>C0-389<br>C0-395 |
| TP2 | Have the cadets participate in activities that celebrate and encourage creativity. | In-Class Activity | 10 min | C0-375 |
| TP3 | Conduct an activity where the cadets will identify the benefits of a creative lesson. | In-Class Activity | 15 min | C0-381<br>C0-383 |
| TP4 | Conduct an activity where the cadets will identify the stages of the creative process. | In-Class Activity | 20 min | C0-377<br>C0-388 |
| TP5 | Conduct an activity where the cadets will incorporate creativity into the lesson-planning process. | In-Class Activity | 20 min | C0-375<br>(p. 10.15)<br>C0-385<br>C0-386 |

5. **Time**:

   a. Introduction / Conclusion: 10 min

   b. In-Class Activity: 80 min

   c. Total: 90 min

6. **Substantiation**: An in-class activity was chosen for this lesson as it is an interactive way to provoke thought and stimulate interest in the creative process and how to incorporate creativity into the lesson-planning process.

7. **References**:


a. C0-375 ISBN 978-1-879097-10-0 Kagan, S., & Kagan, M. (2009). *Kagan cooperative learning*. San Clemente, CA: Kagan Publishing.

b. C0-377 Canadian Yachting Association. (2002). *Level 2 technical coach manual*. Kingston, ON: Canadian Yachting Association.

c. C0-381 McDonald, E. (2006). *How to involve and engage students*. Retrieved March 4, 2009, from http://www.education-world.com/a_curr/columnists/mcdonald/mcdonald007.shtml

d. C0-383 Bell, A. (2007). *Creating a learning centered environment–Introduction*. Retrieved February 23, 2009, from http://www.dialogueonlearning.tc3.edu/model/environment/Introduction-grp.htm

e. C0-385 Exalted Living. (2009). *Creativity on demand*. Retrieved March 3, 2009, from http://www.exaltedliving.com/creativity.htm

f. C0-386 International Forum of Educational Technology & Society. (2006). *Integrating creativity into online university courses*. Retrieved February 11, 2009, from http://ifets.ieee.org/discussions/discuss_september2006.html

g. C0-387 Beals. G. (1998). *Thomas Edison "Quotes"*. Retrieved March 9, 2009, from http://www.thomasedison.com/index.html

h. C0-388 Schoenherr, N. (2007). *Being more creative in everyday life is simple, says author of 'Group Genius'*. Retrieved March 10, 2009, from http://news-innfo.wustl.edu/tips/page/normal/9421.html

i. C0-389 Soria, R. (2009). *How to think like a genius*. Retrieved March 09, 2009, from http://www.creativity-portal.com/howto/a/davinci/genius.html

j. C0-395 MindTools. (2009). *Approaches to creativity*. Retrieved March 16, 2009, from http://www.mindtools.com/pages/article/newCT_00.htm


8. **Training Aids**:

a. Presentation aids (eg, whiteboard / flip chart / OHP) appropriate for the classroom / training area,

b. Mixer worksheet,

c. Mixer worksheet Answer Key,

d. Pigture This worksheet,

e. Cliché Stretching worksheet,

f. Celebrate Success handout,

g. The Benefits of Creative Lessons worksheet,

h. The Benefits of Creative Lessons Answer Key,

i. The Benefits of Creative Lessons phrase strips,

j. The Creative Process handout,

k. Forced Analogy worksheet,

l. Forced Analogy Answer Key,

m. Empty match box,

n. Ways to Incorporate Creativity handout,

o. Flip chart paper,

p. Markers, and

q. CD player.

9. **Learning Aids**:

a. Mixer worksheet,

b. Pigture This worksheet,

c. Cliché Stretching worksheet,

d. Celebrate Success handout,

e. The Benefits of Creative Lessons worksheet,

f. The Creative Process handout,

g. Forced Analogy worksheet,

h. Empty match box,

i. Ways to Incorporate Creativity handout,

j. Flip chart paper, and

k. Markers.

10. **Test Details**: Nil.

11. **Remarks**:

a. This EO should be scheduled as one training session.

b. This EO shall be conducted after EO M409.05 (Instruct a 30-Minute Lesson).

THIS PAGE INTENTIONALLY LEFT BLANK

**EO C409.05**

1. **Performance**: Act as an Assistant Drill Instructor

2. **Conditions**:

   a. Given:

      (1) Supervision, and

      (2) Assistance as required.

   b. Denied: Nil.

   c. Environmental: Drill hall or outdoor parade square in favourable weather.

3. **Standard**: The cadet shall act as an assistant drill instructor, to include:

   a. preparing training aids as required;

   b. helping instruct the lesson;

   c. supervising the cadets;

   d. providing assistance as required; and

   e. securing training aids as required.

4. **Teaching Points**: Have the cadets act as assistant drill instructors in on-the-job training (OJT), to include:

   a. preparing training aids as required;

   b. helping instruct the lesson;

   c. supervising the cadets;

   d. providing assistance as required; and

   e. securing training aids as required

5. **Time**: OJT: 90 min

6. **Substantiation**: OJT was chosen for this lesson as it allows the cadets to assist instructing a drill lesson in a safe and controlled environment. The OJT experience provides the cadets a practical application of learned skills in a realistic setting. The cadets reflect on the experience and receive feedback on the performance, which helps to shape future experiences. The cadets develop a sense of responsibility from the OJT aiding their development as a leader.

7. **References**: Nil.

8. **Training Aids**: Nil.

9. **Learning Aids**: Presentation aids (eg, whiteboard / flip chart / OHP) appropriate for the classroom / training area.

10. **Test Details**: Nil.

11. **Remarks**:

    a. Prior to this EO, the course officer shall communicate with the training officer to ensure that cadets are paired with a Proficiency Level One, Two or Three instructor on a regular training session.

b. A number of factors may exist based on the size of the squadron that will not allow for all Proficiency Level Four cadets to be scheduled for this EO at the same time. In this circumstance, special consideration should be given to minimize the cadet's absence from other areas of training. For example, scheduling half of the cadets for this EO while the other half is scheduled for EO C440.02 (Launch a Small Model Rocket) and reversing the schedule for the following training session.

c. During this EO, the instructor shall:

(1) brief the cadet prior to commencing the lesson;

(2) assign the cadet tasks IAW Paragraph 3;

(3) monitor the cadet; and

(4) debrief the cadet at the end of the lesson.

**EO C409.06**

1. **Performance**: Instruct a 30-Minute Drill Lesson

2. **Conditions**:

   a. Given:

      (1) A lesson specification,

      (2) An instructional guide, and

      (3) Supervision.

   b. Denied: Assistance.

   c. Environmental: A drill hall or outdoor parade square in favourable weather.

3. **Standard**: IAW A-PD-201-000/PT-001, *Canadian Forces Manual of Drill and Ceremonial*, the cadet shall instruct a 30-minute drill lesson by:

   a. preparing the lesson,

   b. introducing the lesson;

   c. presenting the content of the lesson;

   d. applying the drill instruction sequence;

   e. confirming the skills learning during the lesson;

   f. concluding the lesson.

4. **Teaching Points**: Supervise while the cadets instruct a 30-minute drill lesson.

5. **Time**:

| | | |
|---|---|---|
| a. | Introduction / Conclusion: | 5 min |
| b. | Practical Activity: | 85 min |
| c. | Total: | 90 min |

6. **Substantiation**: A practical activity was chosen for this lesson as it is an interactive way for cadets to develop drill instructional skills in a safe and controlled environment.

7. **References**: A0-002 A-PD-201-000/PT-000 Director History and Heritage 3-2. (2005). *The Canadian Forces manual of drill and ceremonial*. Ottawa, ON: Department of National Defence.

8. **Training Aids**: Drill Instructional Techniques Assessment Form.

9. **Learning Aids**: Drill Instructional Techniques Assessment Form.

10. **Test Details**: Nil.

11. **Remarks**:

    a. This EO shall be conducted after C309.04 (Identify Formations for Drill Instruction), EO C309.05 (Plan a Drill Lesson) and EO C309.06 (Instruct a 15-Minute Drill Lesson).

b. The cadets shall instruct Proficiency Level One or Proficiency Level Two cadets on a regular training session.

c. The course officer shall communicate with the training officer to:

(1) place the Proficiency Level Four cadets into the instructor schedule; and

(2) ensure the cadets are assigned a lesson at least one week prior to conducting this EO, to include:

(a) a lesson specification, and

(b) an instructional guide.

d. Time for lesson planning for this EO is available in EO C309.05 (Plan a Drill Lesson), should the course officer deem it necessary.

e. Adjust the period allocation for this EO if all three periods are not required for each Proficiency Level Four cadet to instruct a 30-minute drill lesson.

## CANADIAN ARMED FORCES (CAF) FAMILIARIZATION

1. **PO X20 – Participate in CAF Familiarization Activities**

   This PO and its associated EOs are located in A-CR-CCP-801/PG-001, *Royal Canadian Air Cadets Proficiency Level One Qualification Standard and Plan*.

THIS PAGE INTENTIONALLY LEFT BLANK

**PO 429**

1. **Performance**: Communicate Using Radio Procedures for Aviation Transmission

2. **Conditions**:

   a. Given:

      (1) Hand-held radio,

      (2) Supervision, and

      (3) Assistance as required.

   b. Denied: Nil.

   c. Environmental: Classroom or training area large enough to accommodate the entire group.

3. **Standard**: IAW the *Study Guide for the Radiotelephone Operator's Restricted Certificate (Aeronautical) [ROC-A*], the cadet shall communicate using radio procedures for aviation transmission.

4. **Remarks**:

   a. No fees will be levied by approved examiners on behalf of Industry Canada for giving the examination for the ROC-A.

   b. The Training Officer or Commanding Officer (CO) must locate and obtain the services of a qualified examiner by contacting Industry Canada at www.ic.gc.ca.

   c. If the squadron wishes to have a staff member apply to become a qualified examiner, contact Industry Canada at www.ic.gc.ca.

5. **Complementary Material**:

   a. PO 429 (Communicate Using Radio Procedures for Aviation Transmission) is a complementary package designed to provide the cadet an opportunity to communicate using radio procedures during aviation transmission.

   b. If the squadron chooses to have cadets obtain the ROC-A, all complementary material must be instructed, and a qualified examiner must conduct 429 PC.

THIS PAGE INTENTIONALLY LEFT BLANK

**EO C429.01**

1. **Performance**: Explain Regulations and Operating Procedures for Aviation Transmission and Licensing

2. **Conditions**:

   a. Given:

      (1) Supervision, and

      (2) Assistance as required.

   b. Denied: Nil.

   c. Environmental: Classroom or training area large enough to accommodate the entire group.

3. **Standard**: The cadet shall explain regulations and operating procedures for aviation transmission and licensing, to include:

   a. priorities, privacy, and control of communication;

   b. time, date, and transmission of numbers;

   c. call signs, air carriers, civil registration, and ground stations; and

   d. calling procedures.

4. **Teaching Points**:

| TP | Description | Method | Time | Refs |
|---|---|---|---|---|
| TP1 | Explain priorities, privacy, and control of communication. | Interactive Lecture | 5 min | C3-116 (pp. 219–220)<br>C3-182 (pp. 2–4) |
| TP2 | Explain time, date, and transmission of numbers. | Interactive Lecture | 5 min | C3-116 (p. 218)<br>C3-182 (pp. 5–8) |
| TP3 | Explain operating procedures, to include:<br>a. words and phrases,<br>b. call signs,<br>c. air carriers,<br>d. civil registration, and<br>e. ground stations. | Interactive Lecture | 5 min | C3-116 (p. 219)<br>C3-182 (pp. 8–9, pp. 24–25) |
| TP4 | Explain calling procedures, to include:<br>a. single station call,<br>b. all station general call,<br>c. multiple station call,<br>d. replying,<br>e. corrections and repetitions, | Interactive Lecture | 10 min | C3-182 (pp. 9–13) |

| TP | Description | Method | Time | Refs |
|---|---|---|---|---|
| | f. message handling procedures, and<br>g. signal (or radio) checks | | | |

5. **Time**:

| | | |
|---|---|---|
| a. | Introduction / Conclusion: | 5 min |
| b. | Interactive Lecture: | 25 min |
| c. | Total: | 30 min |

6. **Substantiation**: An interactive lecture was chosen for this lesson to clarify, emphasize, and summarize regulations and operating procedures for aviation transmission and licensing.

7. **References**:

   a. C3-116 ISBN 0-9680390-5-7 MacDonald, A.F., & Peppler, I.L. (2000). *From the ground up: Millennium edition*. Ottawa, ON: Aviation Publishers Co. Limited.

   b. C3-182 *Study Guide for the Radiotelephone Operator's Restricted Certificate (Aeronautical)*. (2008). Retrieved September 28, 2008, from www.ic.gc.ca/epic/site/smt-gst.nsf/en/sf01397e.html

8. **Training Aids**:

   a. Presentation aids (eg, whiteboard / flip chart / OHP / multimedia projector) appropriate for classroom / training area.

   b. Study Guide for the Radiotelephone Operator's Restricted Certificate (Aeronautical) (ROC-21).

9. **Learning Aids**: *Study Guide for the Radiotelephone Operator's Restricted Certificate (Aeronautical) (ROC-21)*.

10. **Test Details**: This EO is assessed IAW Chapter 3, Annex B, 429 PC.

11. **Remarks**:

   a. If the squadron chooses to have cadets obtain the ROC-A, all complementary EOs for this PO must be instructed, and a qualified examiner must conduct 429 PC.

   b. Cadets who are qualified Advanced Aviation may assist with this instruction.

**EO C429.02**

1. **Performance**: Communicate Using Radio Procedures for Aviation Transmission

2. **Conditions**:

   a. Given:

      (1) Hand-held radio,

      (2) Supervision, and

      (3) Assistance as required.

   b. Denied: Nil.

   c. Environmental: Classroom or training area large enough to accommodate the entire group.

3. **Standard**: The cadet shall communicate using radio procedures for aviation transmission, to include:

   a. standard phrases,

   b. priority of communication, and

   c. radio check.

4. **Teaching Points**:

| TP | Description | Method | Time | Refs |
|---|---|---|---|---|
| TP1 | Explain the standard phrases used in a radio message, to include:<br>a. acknowledge,<br>b. affirmative,<br>c. break,<br>d. confirm,<br>e. correction,<br>f. do you read,<br>g. go ahead,<br>h. how do you read,<br>i. I say again,<br>j. negative,<br>k. out,<br>l. over,<br>m. read back,<br>n. roger,<br>o. say again,<br>p. speak slower,<br>q. stand by,<br>r. that is correct, | Interactive Lecture | 5 min | C3-116 (p. 219)<br>C3-182 (p. 24) |

| TP | Description | Method | Time | Refs |
|---|---|---|---|---|
| | s. verify, and<br>t. WILCO. | | | |
| TP2 | Explain priority of communication, to include:<br>a. emergency communications,<br>b. flight safety communications,<br>c. scheduled broadcasts,<br>d. unscheduled broadcasts, and<br>e. other air-ground communications. | Interactive Lecture | 5 min | C3-116 (pp. 107, 110–111, 164, 170–171, 219–220) |
| TP3 | Explain emergency transmissions, to include:<br>a. distress calls,<br>b. urgency calls, and<br>c. safety calls. | Interactive Lecture | 5 min | C3-116 (pp. 225–226)<br>C3-182 (pp. 14–23) |
| TP4 | Explain a radio check, to include:<br>a. readability, to include:<br>(1) unreadable,<br>(2) readable now and then,<br>(3) readable with difficulty,<br>(4) readable, and<br>(5) perfectly readable; and<br>b. strength, to include:<br>(1) bad,<br>(2) poor,<br>(3) fair,<br>(4) good, and<br>(5) excellent. | Interactive Lecture | 5 min | C3-116 (p. 220)<br>C3-182 (pp. 13–14) |
| TP5 | Have the cadets, in pairs, conduct station-to-station calls using the ITU phonetic alphabet and numbers, and conduct a signal check, to include:<br>a. turning the radio on;<br>b. using message parts, to include:<br>(1) initiating a call with "____" this is "____", over;<br>(2) answering a call with "____" this is "____", go ahead, over";<br>(3) requesting a signal check on a different frequency; | In-Class Activity | 5 min | |

| TP | Description | Method | Time | Refs |
|---|---|---|---|---|
| | (4) responding to the request; and<br>(5) acknowledging the call and ending the call with "out";<br>c. using radio techniques; and<br>d. turning the radio off. | | | |

5. **Time**:

| | | |
|---|---|---|
| a. | Introduction / Conclusion: | 5 min |
| b. | Interactive Lecture: | 20 min |
| c. | In-Class Activity: | 5 min |
| d. | Total: | 30 min |

6. **Substantiation**:

   a. An interactive lecture was chosen for TPs 1–4 to clarify, emphasize and summarize radio procedures for aviation transmission.

   b. An in-class activity was chosen for TP 5 as an interactive way to confirm the cadets' comprehension of radio procedures for aviation transmission.

7. **References**:

   a. C3-116 ISBN 0-9680390-5-7 MacDonald, A.F., & Peppler, I.L. (2000). *From the ground up: Millennium edition*. Ottawa, ON: Aviation Publishers Co. Limited.

   b. C3-182 *Study Guide for the Radiotelephone Operator's Restricted Certificate (Aeronautical)*. (2008). Retrieved September 28, 2008, from www.ic.gc.ca/epic/site/smt-gst.nsf/en/sf01397e.html

8. **Training Aids**: Presentation aids (eg, whiteboard / flip chart / OHP / multimedia projector) appropriate for classroom / training area.

9. **Learning Aids**:

   a. Hand-held radio,

   b. Pen / pencil, and

   c. Radio Activity handout.

10. **Test Details**: This EO is assessed IAW Chapter 3, Annex B, 429 PC.

11. **Remarks**:

   a. If the squadron chooses to have cadets obtain the ROC-A, all complementary EOs for this PO must be instructed, and a qualified examiner must conduct 429 PC.

   b. Cadets who are qualified Advanced Aviation may assist with this instruction.

THIS PAGE INTENTIONALLY LEFT BLANK

**EO C429.03**

1. **Performance**: Describe Radio Wavelengths, Signals, Licences and Equipment

2. **Conditions**:

   a. Given:

      (1) Supervision, and

      (2) Assistance as required.

   b. Denied: Nil.

   c. Environmental: Classroom or training area large enough to accommodate the entire group.

3. **Standard**: The cadet shall describe:

   a. radio wavelengths, frequencies and bands;

   b. characteristics of radio signals;

   c. aeronautical terms and definitions;

   d. radio station licences; and

   e. maintenance of equipment.

4. **Teaching Points**:

| TP | Description | Method | Time | Refs |
|---|---|---|---|---|
| TP1 | Describe radio wavelengths, frequencies and bands, to include:<br>a. cycle;<br>b. kilohertz;<br>c. megahertz;<br>d. low, medium, high, very high, and ultra high frequencies; and<br>e. frequency allocation. | Interactive Lecture | 5 min | C3-116 (pp. 207–209) |
| TP2 | Describe characteristics of radio signals, to include:<br>a. ground waves, and<br>b. sky waves. | Interactive Lecture | 5 min | C3-116 (p. 210) |
| TP3 | Describe aeronautical terms and definitions, to include:<br>a. aerodrome,<br>b. aeronautical service,<br>c. aircraft station,<br>d. Aeronautical Operation Control Communications (AOCC), | Interactive Lecture | 5 min | C3-182 (pp. 22–23) |

| TP | Description | Method | Time | Refs |
|---|---|---|---|---|
| | e. aeronautical station,<br>f. Air Traffic Control (ATC) Service,<br>g. controlled aerodrome,<br>h. flight service station (FSS),<br>i. General Aviation Communication (GAC),<br>j. ground control communication,<br>k. private advisory service, and<br>l. private multiple station. | | | |
| TP4 | Describe radio station licences, to include:<br>a. call sign,<br>b. frequencies,<br>c. special conditions,<br>d. equipment, and<br>e. fines. | Interactive Lecture | 5 min | C3-116 (p. 218)<br>C3-182 (p. 27) |
| TP5 | Describe maintenance of equipment, to include:<br>a. transceiver (transmitter and receiver),<br>b. speaker (headset),<br>c. microphone and antenna connections, and<br>d. fuses. | Interactive Lecture | 5 min | C3-116 (pp. 211–212)<br>C3-182 (p. 26) |

5. **Time**:

   a. Introduction / Conclusion: 5 min
   b. Interactive Lecture: 25 min
   c. Total: 30 min

6. **Substantiation**: An interactive lecture was chosen for this lesson to orient the cadets to the topic of radio wavelengths, signals, licences, and equipment and to create interest in the subject.

7. **References**:

   a. C3-116 ISBN 0-9680390-5-7 MacDonald, A. F., & Peppler, I. L. (2000). *From the ground up: Millennium edition*. Ottawa, ON: Aviation Publishers Co. Limited.

   b. C3-182 *Study guide for the radiotelephone operator's restricted certificate (Aeronautical)*. (2008). Retrieved September 28, 2008, from www.ic.gc.ca/epic/site/smt-gst.nsf/en/sf01397e.html

8. **Training Aids**: Presentation aids (eg, whiteboard / flip chart / OHP / multimedia projector) appropriate for classroom / training area.

9. **Learning Aids**:

   a. Handouts, and

   b. Pen / pencils.

10. **Test Details**: This EO is assessed IAW Chapter 3, Annex B, 429 PC.

11. **Remarks**:

    a. If the squadron chooses to have cadets obtain the ROC-A, all complementary EOs for this PO must be instructed, and a qualified examiner must conduct 429 PC.

    b. Cadets who are qualified Advanced Aviation may assist with this instruction.

THIS PAGE INTENTIONALLY LEFT BLANK

**EO C429.04**

1. **Performance**: Explain Emergency, Urgency and Safety Communications

2. **Conditions**:

   a. Given:

      (1) Supervision, and

      (2) Assistance as required.

   b. Denied: Nil.

   c. Environmental: Classroom or training area large enough to accommodate the entire group.

3. **Standard**: The cadet shall explain emergency, urgency and safety communications.

4. **Teaching Points**:

| TP | Description | Method | Time | Refs |
|---|---|---|---|---|
| TP1 | Explain emergency communication, to include:<br>a. distress call,<br>b. priority,<br>c. frequencies to use,<br>d. distress message,<br>e. repetition of distress message,<br>f. action by station in distress,<br>g. action by stations other than the station in distress,<br>h. distress traffic,<br>i. acknowledge of receipt of a distress message,<br>j. action by stations acknowledging receipt of a distress message,<br>k. relay of a distress message,<br>l. imposition of silence, and<br>m. cancellation of distress. | Interactive Lecture | 15 min | C3-116 (pp. 225–226)<br>C3-182 (pp. 15–20) |
| TP2 | Explain urgency and safety communications, to include:<br>a. urgency call,<br>b. priority,<br>c. frequencies to use,<br>d. urgency message,<br>e. reply to urgency message, | Interactive Lecture | 10 min | C3-116 (p. 226)<br>C3-182 (pp. 20–21) |

| TP | Description | Method | Time | Refs |
|---|---|---|---|---|
| | f. cancellation of urgency message, and<br>g. safety signal. | | | |

5. **Time**:

| | | |
|---|---|---|
| a. | Introduction / Conclusion: | 5 min |
| b. | Interactive Lecture: | 25 min |
| c. | Total: | 30 min |

6. **Substantiation**: An interactive lecture was chosen for this lesson to clarify, emphasize, and summarize emergency, urgency and safety communications.

7. **References**:

   a. C3-116 ISBN 0-9680390-5-7 MacDonald, A.F., & Peppler, I.L. (2000). *From the ground up: Millennium edition*. Ottawa, ON: Aviation Publishers Co. Limited.

   b. C3-182 *Study Guide for the Radiotelephone Operator's Restricted Certificate (Aeronautical)*. (2008). Retrieved September 28, 2008, from www.ic.gc.ca/epic/site/smt-gst.nsf/en/sf01397e.html

8. **Training Aids**: Presentation aids (eg, whiteboard / flip chart / OHP / multimedia projector) appropriate for classroom / training area.

9. **Learning Aids**: Nil.

10. **Test Details**: This EO is assessed IAW Chapter 3, Annex B, 429 PC.

11. **Remarks**:

   a. If the squadron chooses to have cadets obtain the ROC-A, all complementary EOs for this PO must be instructed, and a qualified examiner must conduct 429 PC.

   b. Cadets who are qualified Advanced Aviation may assist with this instruction.

**PO 431**

1. **Performance**: Explain Principles of Flight

2. **Conditions**:

   a. Given:

      (1) Supervision, and

      (2) Assistance as required.

   b. Denied: Nil.

   c. Environmental: Classroom or training area large enough to accommodate the entire group.

3. **Standard**: The cadet will explain principles of flight by:

   a. explaining features of wing design; and

   b. describing flight instruments.

4. **Remarks**: Nil.

5. **Complementary Material**:

   a. Complementary material associated with PO 431 is designed to enhance the cadet's knowledge of principles of flight, specifically:

      (1) EO C431.01 (Explain Flight Performance Factors),

      (2) EO C431.02 (Demonstrate Turns, Climbs and Descents in a Flight Simulator), and

      (3) EO C431.03 (Fly a Radio-Controlled Aircraft).

   b. Complementary material from PO 331 that was not conducted in the previous year may be selected as complementary training in Proficiency Level Four.

THIS PAGE INTENTIONALLY LEFT BLANK

**EO M431.01**

1. **Performance**: Explain Features of Wing Design
2. **Conditions**:
   a. Given:
      (1) Supervision, and
      (2) Assistance as required.
   b. Denied: Nil.
   c. Environmental: Classroom or training area large enough to accommodate the entire group.
3. **Standard**: The cadet shall explain features of wing design, to include:
   a. airfoils,
   b. high-lift devices, and
   c. spoilers and speed brakes.
4. **Teaching Points**:

| TP | Description | Method | Time | Refs |
|---|---|---|---|---|
| TP1 | Explain airfoils, to include:<br>a. chord,<br>b. conventional airfoils,<br>c. laminar flow airfoils,<br>d. planform,<br>e. aspect ratio,<br>f. angle of incidence,<br>g. wash-out, and<br>h. wash-in. | Interactive Lecture | 10 min | C3-116 (pp. 26–27) |
| TP2 | Explain high-lift devices, to include:<br>a. wing-tip design,<br>b. wing fences,<br>c. slats,<br>d. slots, and<br>e. flaps. | Interactive Lecture | 10 min | C3-116 (pp. 27–30) |
| TP3 | Explain spoilers and speed brakes. | Interactive Lecture | 5 min | C3-116 (p. 28) |

5. **Time**:

| | | |
|---|---|---|
| a. | Introduction / Conclusion: | 5 min |
| b. | Interactive Lecture: | 25 min |
| c. | Total: | 30 min |

6. **Substantiation**: An interactive lecture was chosen for this lesson to clarify, emphasize, and summarize features of wing design.

7. **References**: C3-116 ISBN 0-9680390-5-7 MacDonald, A. F. & Peppler, I. L. (2000). *From the ground up: Millennium edition*. Ottawa, ON: Aviation Publishers Co. Limited.

8. **Training Aids**:

   a. Presentation aids (eg, whiteboard / flip chart / OHP / multimedia projector) appropriate for the classroom / training area,

   b. Model of a light fixed-wing aircraft with wing struts, fixed gear and control surface detail, and

   c. Model of a wing.

9. **Learning Aids**: Nil.

10. **Test Details**: This EO is assessed IAW Chapter 3, Annex B, Aviation Subjects–Combined Assessment PC.

11. **Remarks**: Cadets who are qualified Advanced Aviation may assist with this instruction.

**EO M431.02**

1. **Performance**: Describe Flight Instruments

2. **Conditions**:

   a. Given:

      (1) Supervision, and

      (2) Assistance as required.

   b. Denied: Nil.

   c. Environmental: Classroom or training area large enough to accommodate the entire group.

3. **Standard**: The cadet shall describe flight instruments, to include:

   a. reviewing pitot static systems and instruments;

   b. describing the gyroscope and gyroscopic instruments;

   c. describing angle of attack indicator; and

   d. describing Mach indicator.

4. **Teaching Points**:

| TP | Description | Method | Time | Refs |
|---|---|---|---|---|
| TP1 | Review the pitot static system and pitot static instruments:<br>a. airspeed indicator (ASI),<br>b. altimeter, and<br>c. vertical speed indicator (VSI). | Interactive Lecture | 25 min | C3-116 (pp. 39–45) |
| TP2 | Describe the gyroscope and gyroscopic instruments:<br>a. heading indicator,<br>b. attitude indicator,<br>c. turn and slip indicator, and<br>d. turn co-ordinator. | Interactive Lecture | 15 min | C3-116 (pp. 45–49) |
| TP3 | Describe the angle of attack (AOA) indicator. | Interactive Lecture | 5 min | C3-116 (p. 49) |
| TP4 | Describe the Mach indicator. | Interactive Lecture | 5 min | C3-116 (p. 50) |

5. **Time**:

   a. Introduction / Conclusion: 10 min

   b. Interactive Lecture: 50 min

   c. Total: 60 min

6. **Substantiation**: An interactive lecture was chosen for this lesson to clarify, emphasize, and summarize flight instruments.

7. **References**: C3-116 ISBN 0-9680390-5-7 MacDonald, A. F., & Peppler, I. L. (2000). *From the ground up: Millennium edition*. Ottawa, ON: Aviation Publishers Co. Limited.

8. **Training Aids**:

   a. Presentation aids (eg, whiteboard / flip chart / OHP / multimedia projector) appropriate for the classroom / training area,

   b. Large mock-up of an ASI,

   c. Large mock-up of an altimeter,

   d. Large mock-up of a VSI, and

   e. Gyroscope.

9. **Learning Aids**: Nil.

10. **Test Details**: This EO is assessed IAW Chapter 3, Annex B, Aviation Subjects-Combined Assessment PC.

11. **Remarks**: Cadets who are qualified Advanced Aviation may assist with this instruction.

**EO C431.01**

1. **Performance**: Explain Flight Performance Factors

2. **Conditions**:

   a. Given:

      (1) Supervision, and

      (2) Assistance as required.

   b. Denied: Nil.

   c. Environmental: Classroom or training area large enough to accommodate the entire group.

3. **Standard**: The cadet shall explain flight performance factors, to include:

   a. left turning tendencies,

   b. climbs and glides,

   c. turns,

   d. stalls, spins, and spirals, and

   e. airspeed limitations.

4. **Teaching Points**:

| TP | Description | Method | Time | Refs |
|---|---|---|---|---|
| TP1 | Explain the following left turning tendencies:<br>a. torque,<br>b. asymmetric thrust,<br>c. precession, and<br>d. slipstream. | Interactive Lecture | 15 min | C3-116 (pp. 32–33) |
| TP2 | Explain climbs and glides. | Interactive Lecture | 10 min | C3-116 (pp. 33–34) |
| TP3 | Explain turns. | Interactive Lecture | 5 min | C3-116 (pp. 34–35) |
| TP4 | Explain stalls, spins, and spirals. | Interactive Lecture | 15 min | C3-116 (pp. 35–38) |
| TP5 | Explain airspeed limitations. | Interactive Lecture | 5 min | C3-116 (pp. 38–39) |

5. **Time**:

   a. Introduction / Conclusion: 10 min

   b. Interactive Lecture: 50 min

   c. Total: 60 min

6. **Substantiation**: An interactive lecture was chosen for this lesson to clarify, emphasize, and summarize flight performance factors.

7. **References**: C3-116 ISBN 0-9680390-5-7 MacDonald, A. F., & Peppler, I. L. (2000). *From the ground up: Millennium edition*. Ottawa, ON: Aviation Publishers Co. Limited.

8. **Training Aids**:

   a. Presentation aids (eg, whiteboard / flip chart / OHP / multimedia projector) appropriate for the classroom / training area, and

   b. Model aircraft with articulated control surfaces and flaps.

9. **Learning Aids**: Nil.

10. **Test Details**: Nil.

11. **Remarks**: Cadets who are qualified Advanced Aviation may assist with this instruction.

**EO C431.02**

1. **Performance**: Demonstrate Turns, Climbs and Descents in a Flight Simulator

2. **Conditions**:

   a. Given:

      (1) Flight simulator,

      (2) Supervision, and

      (3) Assistance as required.

   b. Denied: Nil.

   c. Environmental: Classroom or training area large enough to accommodate the entire group.

3. **Standard**: The cadet shall demonstrate turns, climbs and descents in a flight simulator.

4. **Teaching Points**:

| TP | Description | Method | Time | Refs |
|---|---|---|---|---|
| TP1 | Explain any safety considerations related to the location or design of the flight simulator. | Interactive Lecture | 5 min | C3-156 |
| TP2 | Explain:<br>a. how to manipulate the necessary control inputs, to include:<br>(1) the control column or yoke,<br>(2) the rudder pedals, and<br>b. the location of necessary instruments, to include:<br>(1) the airspeed indicator (ASI),<br>(2) the vertical speed indicator (VSI),<br>(3) the altimeter, and<br>(4) the turn coordinator. | Interactive Lecture | 10 min | C3-139<br>C3-156 |
| TP3 | Explain, demonstrate and have the cadets practice turns, climbs and descents using a flight simulator. | Demonstration and Performance | 70 min | |

5. **Time**:

   a. Introduction / Conclusion: 5 min

   b. Interactive Lecture: 15 min

   c. Demonstration and Performance: 70 min

   d. Total: 90 min

6. **Substantiation**:

   a. An interactive lecture was chosen for TPs 1 and 2 to give direction on procedures and present basic or background information about flight simulation.

   b. A demonstration and performance was chosen for TP 3 as it allows the instructor to explain and demonstrate turns, climbs and descents in a flight simulator while providing an opportunity for the cadets to practice the skills under supervision.

7. **References**:

   a. C3-139 ISBN 0-7715511-5-0 Transport Canada. (1999). *Flight training manual 4th edition revised*. Ottawa, ON: Transport Canada.

   b. C3-156 *Computerized Aircraft Simulation Center*. (2007). Retrieved October 2, 2007, from http://www.regions.cadets.forces.gc.ca/pac/aircad/flight/casc_lessons_e.asp

8. **Training Aids**: Flight simulator.

9. **Learning Aids**: Flight simulator.

10. **Test Details**: Nil.

11. **Remarks**:

   a. All staff should be familiarized with the operation of the flight simulator prior to the cadets arriving. This will allow them to troubleshoot, and give them a better perspective for instructing.

   b. Additional instructors are required for this lesson. There should be one instructor per two flight simulators.

   c. Cadets who are qualified Advanced Aviation may assist with this instruction.

**EO C431.03**

1. **Performance**: Fly a Radio-Controlled Aircraft

2. **Conditions**:

   a. Given:

      (1) Radio-controlled aircraft,

      (2) Supervision, and

      (3) Assistance as required.

   b. Denied: Nil.

   c. Environmental: Large indoor area (eg, gymnasium or drill hall) or a large outdoor area for flying a radio-controlled aircraft.

3. **Standard**: The cadet shall fly a radio-controlled aircraft.

4. **Teaching Points**: IAW the instructions supplied with the radio-controlled aircraft and the Model Aeronautics Association of Canada (MAAC) safety code, have the cadet fly a radio-controlled aircraft.

5. **Time**:

| | | |
|---|---|---|
| a. | Introduction / Conclusion: | 10 min |
| b. | Practical Activity: | 80 min |
| c. | Total: | 90 min |

6. **Substantiation**: A practical activity was chosen for this lesson as it is an interactive way to introduce the cadets to flying a radio-controlled aircraft in a safe and controlled environment. This activity contributes to the development of skills and knowledge in a fun and challenging setting.

7. **References**: C3-303 *Model Aeronautics Association of Canada Safety Code*. (2008). Retrieved February 5, 2009, from http://www.maac.ca/docs/2007/maac_safety_code_v008sept30_08_english.pdf

8. **Training Aids**: Radio-controlled aircraft.

9. **Learning Aids**: Radio-controlled aircraft.

10. **Test Details**: Nil.

11. **Remarks**:

    a. It is recommended that the three periods required for this EO be scheduled consecutively.

    b. The radio-controlled aircraft can be flown individually or in small groups of two to four cadets.

    c. Assistant instructors are required for this lesson.

    d. Suitable model aircraft may be chosen from the following:

       (1) Blade CX2 / CX3 (radio-controlled electric helicopter),

       (2) Blade MCX (radio-controlled electric helicopter),

       (3) SPAD Debonair (radio-controlled airplane),

(4) Alpha 40 DSM2 RTF (radio-controlled airplane),

(5) Vapor Bind-N-Fly / RTF (radio-controlled airplane), and / or

(6) an alternate choice (or choices) selected by the Squadron CO.

e. The helicopter being selected should have the counter-rotating rotor system with a 2.4 GHz radio transmitter.

f. Radio-controlled aircraft simulators such as RealFlight (Knife Edge Software) or FS One (Hangar 9) that run on a personal computer may also be used.

**PO 432**

1. **Performance**: Describe Aero Engine Systems

2. **Conditions**:

   a. Given:

      (1) Supervision, and

      (2) Assistance as required.

   b. Denied: Nil.

   c. Environmental: Classroom or training area large enough to accommodate the entire group.

3. **Standard**: The cadet will describe aero engine systems, to include:

   a. fuel systems,

   b. propeller systems, and

   c. engine instruments.

4. **Remarks**: Nil.

5. **Complementary Material**: Complementary material associated with PO 432 is designed to enhance the cadet's knowledge of aero engines, specifically:

   a. EO C432.01 (Describe Ignition and Electrical Systems),

   b. EO C432.02 (Describe Turbocharging and Supercharging Systems), and

   c. EO C432.03 (Describe Gas Turbine Engines).

THIS PAGE INTENTIONALLY LEFT BLANK

**EO M432.01**

1. **Performance**: Describe Fuel Systems

2. **Conditions**:

   a. Given:

      (1) Supervision, and

      (2) Assistance as required.

   b. Denied: Nil.

   c. Environmental: Classroom or training area large enough to accommodate the entire group.

3. **Standard**: The cadet shall describe fuel systems, to include:

   a. carburetors, and

   b. fuel injection.

4. **Teaching Points**:

| TP | Description | Method | Time | Refs |
|---|---|---|---|---|
| TP1 | Describe fuel systems. | Interactive Lecture | 10 min | C3-116 (pp. 59–61) |
| TP2 | Describe carburetors. | Interactive Lecture | 10 min | C3-116 (pp. 61–68) |
| TP3 | Describe fuel injection. | Interactive Lecture | 5 min | C3-116 (pp. 68–69) |

5. **Time**:

   a. Introduction / Conclusion: 5 min

   b. Interactive Lecture: 25 min

   c. Total: 30 min

6. **Substantiation**: An interactive lecture was chosen for this lesson to clarify, emphasize, and summarize fuel systems.

7. **References**: C3-116 ISBN 0-9680390-5-7 MacDonald, A. F., & Peppler, I. L. (2000). *From the ground up: Millennium edition*. Ottawa, ON: Aviation Publishers Co. Limited.

8. **Training Aids**: Presentation aids (eg, whiteboard / flip chart / OHP / multimedia projector) appropriate for the classroom / training area.

9. **Learning Aids**: Nil.

10. **Test Details**: This EO is assessed IAW Chapter 3, Annex B, Aviation Subjects–Combined Assessment PC.

11. **Remarks**: Cadets who are qualified Advanced Aviation may assist with this instruction.

THIS PAGE INTENTIONALLY LEFT BLANK

**EO M432.02**

1. **Performance**: Describe Propeller Systems

2. **Conditions**:

   a. Given:

      (1) Supervision, and

      (2) Assistance as required.

   b. Denied: Nil.

   c. Environmental: Classroom or training area large enough to accommodate the entire group.

3. **Standard**: The cadet shall describe propeller systems, to include:

   a. propeller types,

   b. feathering, and

   c. propeller reversing.

4. **Teaching Points**:

| TP | Description | Method | Time | Refs |
|---|---|---|---|---|
| TP1 | Describe propeller systems. | Interactive Lecture | 10 min | C3-116 (pp. 72–73) |
| TP2 | Describe types of propellers, to include:<br>a. fixed pitch, and<br>b. variable pitch. | Interactive Lecture | 10 min | C3-116 (pp. 73–75) |
| TP3 | Describe feathering and propeller reversing. | Interactive Lecture | 5 min | C3-116 (p. 75) |

5. **Time**:

   a. Introduction / Conclusion: 5 min

   b. Interactive Lecture: 25 min

   c. Total: 30 min

6. **Substantiation**: An interactive lecture was chosen for this lesson to clarify, emphasize, and summarize propeller systems.

7. **References**: C3-116 ISBN 0-9680390-5-7 MacDonald, A. F., & Peppler, I. L. (2000). *From the ground up: Millennium edition*. Ottawa, ON: Aviation Publishers Co. Limited.

8. **Training Aids**: Presentation aids (eg, whiteboard / flip chart / OHP / multimedia projector) appropriate for the classroom / training area.

9. **Learning Aids**: Nil.

10. **Test Details**: This EO is assessed IAW Chapter 3, Annex B, Aviation Subjects–Combined Assessment PC.

11. **Remarks**: Nil.

**EO M432.03**

1. **Performance**: Describe Engine Instruments

2. **Conditions**:

   a. Given:

      (1) Supervision, and

      (2) Assistance as required.

   b. Denied: Nil.

   c. Environmental: Classroom or training area large enough to accommodate the entire group.

3. **Standard**: The cadet shall describe engine instruments, to include:

   a. oil pressure gauge,

   b. oil temperature gauge,

   c. cylinder head temperature gauge,

   d. tachometer, and

   e. manifold pressure gauge.

4. **Teaching Points**:

| TP | Description | Method | Time | Refs |
|---|---|---|---|---|
| TP1 | Describe the oil pressure and oil temperature gauges. | Interactive Lecture | 5 min | C3-116 (pp. 75–76) |
| TP2 | Describe the cylinder head temperature gauge. | Interactive Lecture | 5 min | C3-116 (p. 76) |
| TP3 | Describe the tachometer. | Interactive Lecture | 5 min | C3-116 (pp. 76–77) |
| TP4 | Describe the manifold pressure gauge. | Interactive Lecture | 5 min | C3-116 (pp. 77–79) |
| TP5 | Conduct an in-class activity to review aero engines. | In-Class Activity | 5 min | |

5. **Time**:

   a. Introduction / Conclusion: 5 min

   b. Interactive Lecture: 20 min

   c. In-Class Activity: 5 min

   d. Total: 30 min

6. **Substantiation**:

   a. An interactive lecture was chosen for TPs 1–4 to clarify, emphasize, and summarize engine instruments.

   b. An in-class activity was chosen for TP 5 as it is an interactive way to reinforce the topic and confirm the cadets' comprehension of aero engine systems.

7. **References**: C3-116 ISBN 0-9680390-5-7 MacDonald, A. F., & Peppler, I. L. (2000). *From the ground up: Millennium edition*. Ottawa, ON: Aviation Publishers Co. Limited.

8. **Training Aids**: Presentation aids (eg, whiteboard / flip chart / OHP / multimedia projector) appropriate for the classroom / training area.

9. **Learning Aids**:

   a. Pen / pencil, and

   b. Aero Engine Review worksheet.

10. **Test Details**: This EO is assessed IAW Chapter 3, Annex B, Aviation Subjects–Combined Assessment PC.

11. **Remarks**: Nil.

**EO C432.01**

1. **Performance**: Describe Ignition and Electrical Systems

2. **Conditions**:

   a. Given:

      (1) Supervision, and

      (2) Assistance as required.

   b. Denied: Nil.

   c. Environmental: Classroom or training area large enough to accommodate the entire group.

3. **Standard**: The cadet shall describe ignition and electrical systems.

4. **Teaching Points**:

| TP | Description | Method | Time | Refs |
|---|---|---|---|---|
| TP1 | Describe the ignition system. | Interactive Lecture | 15 min | C3-116 (pp. 69–71) |
| TP2 | Describe the electrical system. | Interactive Lecture | 10 min | C3-116 (pp. 71–72) |

5. **Time**:

   a. Introduction / Conclusion: 5 min

   b. Interactive Lecture: 25 min

   c. Total: 30 min

6. **Substantiation**: An interactive lecture was chosen for this lesson to clarify, emphasize, and summarize the ignition and electrical systems.

7. **References**: C3-116 ISBN 0-9680390-5-7 MacDonald, A. F., & Peppler, I. L. (2000). *From the ground up: Millennium edition*. Ottawa, ON: Aviation Publishers Co. Limited.

8. **Training Aids**: Presentation aids (eg, whiteboard / flip chart / OHP / multimedia projector) appropriate for the classroom / training area.

9. **Learning Aids**: Nil.

10. **Test Details**: Nil.

11. **Remarks**: Cadets who are qualified Advanced Aviation may assist with this instruction.

THIS PAGE INTENTIONALLY LEFT BLANK

**EO C432.02**

1. **Performance**: Describe Turbocharging and Supercharging Systems

2. **Conditions**:

   a. Given:

      (1) Supervision, and

      (2) Assistance as required.

   b. Denied: Nil.

   c. Environmental: Classroom or training area large enough to accommodate the entire group.

3. **Standard**: The cadet shall describe turbocharging and supercharging systems.

4. **Teaching Points**:

| TP | Description | Method | Time | Refs |
|---|---|---|---|---|
| TP1 | Describe turbocharging. | Interactive Lecture | 10 min | C3-116 (pp. 54–55) |
| TP2 | Describe supercharging. | Interactive Lecture | 5 min | C3-116 (pp. 55–56) |
| TP3 | Conduct an in-class activity to confirm the cadets' comprehension of turbocharging and supercharging. | In-Class Activity | 10 min | |

5. **Time**:

   a. Introduction / Conclusion: 5 min

   b. Interactive Lecture: 15 min

   c. In-Class Activity 10 min

   d. Total: 30 min

6. **Substantiation**:

   a. An interactive lecture was chosen for TPs 1 and 2 to clarify, emphasize, and summarize turbocharging and supercharging systems.

   b. An in-class activity was chosen for TP 3 to confirm the cadets' comprehension of turbocharging and supercharging.

7. **References**: C3-116 ISBN 0-9680390-5-7 MacDonald, A. F., & Peppler, I. L. (2000). *From the ground up: Millennium edition*. Ottawa, ON: Aviation Publishers Co. Limited.

8. **Training Aids**:

   a. Presentation aids (eg, whiteboard / flip chart / OHP / multimedia projector) appropriate for the classroom / training area,

   b. Turbocharging and Supercharging Worksheet, and

   c. Turbocharging and Supercharging Worksheet Answer Key.

9. **Learning Aids**:

   a. Pen / pencil, and

   b. Turbocharging and Supercharging Worksheet.

10. **Test Details**: Nil.

11. **Remarks**: Cadets who are qualified Advanced Aviation may assist with this instruction.

**EO C432.03**

1. **Performance**: Describe Gas Turbine Engines

2. **Conditions**:

   a. Given:

      (1) Supervision, and

      (2) Assistance as required.

   b. Denied: Nil.

   c. Environmental: Classroom or training area large enough to accommodate the entire group.

3. **Standard**: The cadet shall describe gas turbine engines, to include:

   a. turbojets,

   b. turbofans,

   c. turboprops, and

   d. turboshafts.

4. **Teaching Points**:

| TP | Description | Method | Time | Refs |
|---|---|---|---|---|
| TP1 | Describe turbojets. | Interactive Lecture | 10 min | C3-116 (pp. 86–87) |
| TP2 | Describe turbofans. | Interactive Lecture | 10 min | C3-116 (pp. 87–88) |
| TP3 | Describe turboprops and turboshafts. | Interactive Lecture | 5 min | C3-116 (p. 87) |

5. **Time**:

   a. Introduction / Conclusion: 5 min

   b. Interactive Lecture: 25 min

   c. Total: 30 min

6. **Substantiation**: An interactive lecture was chosen for this lesson to clarify, emphasize, and summarize gas turbine engines.

7. **References**: C3-116 ISBN 0-9680390-5-7 MacDonald, A. F., & Peppler, I. L. (2000). *From the ground up: Millennium edition*. Ottawa, ON: Aviation Publishers Co. Limited.

8. **Training Aids**: Presentation aids (eg, whiteboard / flip chart / OHP / multimedia projector) appropriate for the classroom / training area.

9. **Learning Aids**: Nil.

10. **Test Details**: Nil.

11. **Remarks**: Nil.

**PO 436**

1. **Performance**: Explain Aspects of Meteorology

2. **Conditions**:

   a. Given:

      (1) Supervision, and

      (2) Assistance as required.

   b. Denied: Nil.

   c. Environmental: Classroom or training area large enough to accommodate the entire group.

3. **Standard**: The cadet will explain aspects of meteorology, to include:

   a. air masses and fronts, and

   b. winds.

4. **Remarks**: Nil.

5. **Complementary Material**:

   a. Complementary material associated with PO 436 is designed to enhance the cadet's knowledge of meteorology, specifically:

      (1) EO C436.01 (Explain Fog),

      (2) EO C436.02 (Describe Severe Weather Conditions), and

      (3) EO C436.03 (Analyze Weather Information).

   b. Complementary material from PO 336 that was not conducted in the previous year may be selected as complementary training in Proficiency Level Four.

THIS PAGE INTENTIONALLY LEFT BLANK

**EO M436.01**

1. **Performance**: Explain Winds

2. **Conditions**:

   a. Given:

      (1) Supervision, and

      (2) Assistance as required.

   b. Denied: Nil.

   c. Environmental: Classroom or training area large enough to accommodate the entire group.

3. **Standard**: The cadet shall explain winds, to include:

   a. surface winds, and

   b. jet streams.

4. **Teaching Points**:

| TP | Description | Method | Time | Refs |
|---|---|---|---|---|
| TP1 | Explain surface winds, to include:<br>a. katabatic and anabatic winds,<br>b. mountain waves, and<br>c. gusts and squalls. | Interactive Lecture | 15 min | C3-116 (pp. 130–132) |
| TP2 | Describe jet streams. | Interactive Lecture | 10 min | C3-116 (pp. 134–135)<br>C3-334 |

5. **Time**:

   a. Introduction / Conclusion: 5 min

   b. Interactive Lecture: 25 min

   c. Total: 30 min

6. **Substantiation**: An interactive lecture was chosen for this lesson to orient the cadets to winds and generate interest in the subject.

7. **References**:

   a. C3-116 ISBN 0-9680390-5-7 MacDonald, A. F., & Peppler, I. L. (2000). *From the ground up: Millennium edition*. Ottawa, ON: Aviation Publishers Co. Limited.

   b. C3-334 Short N. (2005). Remote Sensing Tutorial. *Federation of American Scientists*. Retrieved February 26, 2009, from http://www.fas.org/irp/imint/docs/rst/Sect14/Sect14_1c.html

8. **Training Aids**: Presentation aids (eg, whiteboard / flip chart / OHP / multimedia projector) appropriate for classroom / training area.

9. **Learning Aids**: Nil.

10. **Test Details**: This EO is assessed IAW Chapter 3, Annex B, Aviation Subjects–Combined Assessment PC.

11. **Remarks**: Cadets who are qualified Advanced Aviation may assist with this instruction.

**EO M436.02**

1. **Performance**: Describe Air Masses and Fronts

2. **Conditions**:

   a. Given:

      (1) Supervision, and

      (2) Assistance as required.

   b. Denied: Nil.

   c. Environmental: Classroom or training area large enough to accommodate the entire group.

3. **Standard**: The cadet shall describe air masses and fronts, to include:

   a. weather in an air mass,

   b. types of fronts, and

   c. frontal weather.

4. **Teaching Points**:

| TP | Description | Method | Time | Refs |
|---|---|---|---|---|
| TP1 | Explain weather in an air mass. | Interactive Lecture | 10 min | C3-116 (p. 140) |
| TP2 | Define and explain types of fronts. | Interactive Lecture | 15 min | C3-116 (p. 140)<br>C3-334 |
| TP3 | Conduct an in-class activity to describe types of fronts and associated weather, to include:<br>a. warm front,<br>b. cold front,<br>c. stationary front,<br>d. occluded fronts, and<br>e. upper fronts. | In-Class Activity | 55 min | A3-044 (pp. 7-12 to<br>7-15)<br>C3-116 (pp. 142–145) |

5. **Time**:

   a. Introduction / Conclusion: 10 min

   b. Interactive Lecture: 25 min

   c. In-Class Activity: 55 min

   d. Total: 90 min

6. **Substantiation**:

   a. An interactive lecture was chosen for TPs 1 and 2 to orient the cadets to air masses and fronts and generate interest.

   b. An in-class activity was chosen for TP 3 as it is an interactive way to present types of fronts and associated weather.

7. **References**:

   a. A3-044 CFACM 2-700 Air Command. (2001). *Air Command weather manual*. Ottawa, ON: Department of National Defence.

   b. C3-116 ISBN 0-9680390-5-7 MacDonald, A. F., & Peppler, I. L. (2000). *From the ground up: Millennium edition*. Ottawa, ON: Aviation Publishers Co. Limited.

   c. C3-334 "Remote Sensing Tutorial", 2005, *Federation of American Scientists*, by N. Short, 2005. Retrieved February 26, 2009 from http://www.fas.org/irp/imint/docs/rst/Sect14/Sect14_1c.html

8. **Training Aids**:

   a. Presentation aids (eg, whiteboard / flip chart / OHP / multimedia projector) appropriate for classroom / training area,

   b. Two thermos / cooler / bottle,

   c. Two baby food jars,

   d. Red and blue food colouring,

   e. Index card / plastic coated paper, and

   f. Fronts information sheets.

9. **Learning Aids**:

   a. Pen / pencil,

   b. Coloured pencils / markers, and

   c. Fronts worksheets.

10. **Test Details**: This EO is assessed IAW Chapter 3, Annex B, Aviation Subjects–Combined Assessment PC.

11. **Remarks**:

   a. It is recommended that the three periods required for this EO be scheduled consecutively.

   b. Cadets who are qualified Advanced Aviation may assist with this instruction.

**EO C436.01**

1. **Performance**: Explain Fog

2. **Conditions**:

   a. Given:

      (1) Supervision, and

      (2) Assistance as required.

   b. Denied: Nil.

   c. Environmental: Classroom or training area large enough to accommodate the entire group.

3. **Standard**: The cadet shall explain:

   a. formation of fog, and

   b. types of fog.

4. **Teaching Points**:

| TP | Description | Method | Time | Refs |
|---|---|---|---|---|
| TP1 | Have the cadets perform an experiment to illustrate the formation of fog. | In-Class Activity | 10 min | C3-116 (p. 147)<br>C3-200 |
| TP2 | Conduct an in-class activity to explain types of fog. | In-Class Activity | 15 min | C3-116 (p. 147) |

5. **Time**:

   a. Introduction / Conclusion: 5 min

   b. In-Class Activity: 25 min

   c. Total: 30 min

6. **Substantiation**: An in-class activity was chosen for this lesson as it is an interactive way to present the formation and types of fog.

7. **References**:

   a. C3-116 ISBN 0-9680390-5-7 MacDonald, A. F., & Peppler, I. L. (2000). *From the ground up: Millennium edition*. Ottawa, ON: Aviation Publishers Co. Limited.

   b. C3-200 Weather Wiz Kids. (2008). *Make fog*. Retrieved September 26, 2008, from http://www.weatherwizkids.com/fog.htm

8. **Training Aids**:

   a. Presentation aids (eg, whiteboard / flip chart / OHP / multimedia projector) appropriate for classroom / training area,

   b. Glass jar,

   c. Strainer,

d. Kettle,

e. Water, and

f. Ice cubes.

9. **Learning Aids**:

a. Glass jar,

b. Strainer,

c. Oven mitts,

d. Water,

e. Rubbing alcohol,

f. Ice cubes,

g. Flip chart paper,

h. Flip chart markers, and

i. From the Ground Up: *Millennium Edition*.

10. **Test Details**: Nil.

11. **Remarks**: Cadets who are qualified Advanced Aviation may assist with this instruction.

**EO C436.02**

1. **Performance**: Describe Severe Weather Conditions

2. **Conditions**:

   a. Given:

      (1) Supervision, and

      (2) Assistance as required.

   b. Denied: Nil.

   c. Environmental: Classroom or training area large enough to accommodate the entire group.

3. **Standard**: The cadet shall describe severe weather conditions, to include:

   a. thunderstorms,

   b. icing, and

   c. turbulence.

4. **Teaching Points**:

| TP | Description | Method | Time | Refs |
|---|---|---|---|---|
| TP1 | Describe thunderstorms, to include:<br>a. formation,<br>b. dangers, and<br>c. avoidance. | Interactive Lecture | 10 min | C3-116 (pp. 148–151) |
| TP2 | Describe icing, to include:<br>a. types of icing, and<br>b. protection from icing. | Interactive Lecture | 5 min | C3-116 (pp. 153–155) |
| TP3 | Describe types of turbulence, to include:<br>a. mechanical turbulence,<br>b. thermal turbulence,<br>c. frontal turbulence, and<br>d. wind shear. | Interactive Lecture | 10 min | C3-116 (p. 156, pp. 288–289) |

5. **Time**:

   a. Introduction / Conclusion: 5 min

   b. Interactive Lecture: 25 min

   c. Total: 30 min

6. **Substantiation**: An interactive lecture was chosen for this lesson to introduce the cadets to severe weather conditions and to generate interest.

7. **References**: C3-116 ISBN 0-9680390-5-7 MacDonald, A. F., & Peppler, I. L. (2000). *From the ground up: Millennium edition*. Ottawa, ON: Aviation Publishers Co. Limited.

8. **Training Aids**: Presentation aids (eg, whiteboard / flip chart / OHP / multimedia projector) appropriate for classroom / training area.

9. **Learning Aids**: Nil.

10. **Test Details**: Nil.

11. **Remarks**: Cadets who are qualified Advanced Aviation may assist with this instruction.

**EO C436.03**

1. **Performance**: Analyze Weather Information

2. **Conditions**:

   a. Given:

      (1) Aviation reports and forecasts,

      (2) Supervision, and

      (3) Assistance as required.

   b. Denied: Nil.

   c. Environmental: Classroom or training area large enough to accommodate the entire group.

3. **Standard**: The cadet shall analyze weather information by reading:

   a. aviation routine weather reports (METARs),

   b. aerodrome forecasts (TAFs),

   c. upper winds and temperature forecasts (FDs), and

   d. graphic area forecasts (GFAs).

4. **Teaching Points**:

| TP | Description | Method | Time | Refs |
|---|---|---|---|---|
| TP1 | Describe a METAR, to include:<br>a. definition,<br>b. frequency of reports,<br>c. special weather reports (SPECI), and<br>d. where METARs are available. | Interactive Lecture | 5 min | C2-044 (p. 144)<br>C3-116 (p. 160) |
| TP2 | Familiarize the cadets with METAR terminology, to include:<br>a. report type,<br>b. location indicator,<br>c. date and time of observation,<br>d. report modifier,<br>e. wind,<br>f. prevailing visibility,<br>g. runway visual range,<br>h. present weather,<br>i. sky conditions,<br>j. temperature and dewpoint,<br>k. altimeter setting, | Interactive Lecture | 15 min | C2-044 (pp. 143–147)<br>C3-116 (pp. 160–163) |

| TP | Description | Method | Time | Refs |
|---|---|---|---|---|
| | l. recent weather,<br>m. wind shear, and<br>n. remarks. | | | |
| TP3 | Describe a TAF, to include:<br>a. definition,<br>b. issue and validity, and<br>c. where TAFs are available. | Interactive Lecture | 5 min | C2-044 (p. 135)<br>C3-116 (p. 167) |
| TP4 | Familiarize the cadets with TAF terminology, to include:<br>a. report type,<br>b. location indicator,<br>c. date and time of origin,<br>d. period of validity,<br>e. wind,<br>f. low-level wind shear,<br>g. prevailing visibility,<br>h. significant weather,<br>i. sky condition,<br>j. change groups, and<br>k. remarks. | Interactive Lecture | 15 min | C2-044 (pp. 136–139)<br>C3-116 (pp. 167–169) |
| TP5 | Describe an FD, to include:<br>a. definition,<br>b. decoding, and<br>c. where FDs are available. | Interactive Lecture | 5 min | C2-044 (p. 140)<br>C3-116 (p. 169) |
| TP6 | Describe a GFA, to include:<br>a. definition,<br>b. issue and validity,<br>c. coverage area,<br>d. units of measure,<br>e. abbreviations and symbols, and<br>f. where GFAs are available. | Interactive Lecture | 10 min | C2-044 (p. 120)<br>C3-116 (p. 166) |
| TP7 | Familiarize the cadets with GFA Clouds and Weather Chart layout, to include:<br>a. title box,<br>b. legend box,<br>c. comments box, and | Interactive Lecture | 15 min | C2-044 (pp. 120–124)<br>C3-116 (pp. 166–167) |

| TP | Description | Method | Time | Refs |
|---|---|---|---|---|
| | d. weather information section, to include:<br>(1) synoptic features,<br>(2) clouds,<br>(3) surface-based layers,<br>(4) visibility,<br>(5) weather and obstructions to vision,<br>(6) isobars, and<br>(7) surface winds. | | | |
| TP8 | Conduct an activity to have the cadets read METARs, TAFs, FDs and GFA Clouds and Weather Charts. | In-Class Activity | 15 min | |

5. **Time**:

| | | |
|---|---|---|
| a. | Introduction / Conclusion: | 5 min |
| b. | Interactive Lecture: | 70 min |
| c. | In-Class Activity | 15 min |
| d. | Total: | 90 min |

6. **Substantiation**:

a. An interactive lecture was chosen for TPs 1–7 to introduce weather reports and forecasts, to give the cadets the basic material they need to decode and analyze the information and to generate interest.

b. An in-class activity was chosen for TP 8 as it is an interactive way for the cadets to practice analyzing weather information under supervision.

7. **References**:

a. C2-044 Transport Canada. (2008). *Aeronautical information manual*. Retrieved September 29, 2008, from http://www.tc.gc.ca/publications/EN/TP14371/PDF/HR/TP14371E.PDF

b. C3-116 ISBN 0-9680390-5-7 MacDonald, A. F., & Peppler, I. L. (2000). *From the ground up: Millennium edition*. Ottawa, ON: Aviation Publishers Co. Limited.

8. **Training Aids**:

a. Presentation aids (eg, whiteboard / flip chart / OHP / multimedia projector) appropriate for the classroom / presentation area, and

b. Recent local METARs, TAFs, FDs and GFAs.

9. **Learning Aids**:

a. Handout of sample METARs and SPECIs,

b. Handout of sample TAFs,

c. Handout of sample FDs,

d. Handout of sample GFAs,

e. Handout of the World Meteorological Organization (WMO) code chart, and

f. Handout of the aviation forecast abbreviations chart.

10. **Test Details**: Nil.

11. **Remarks**:

a. Recent METARs, TAFs, FDs and GFAs can be found at http://www.flightplanning.navcanada.ca. Click on the METAR / TAF, UPR WNDS (FDs), or Graphical FA icon and choose the desired region.

b. It is recommended that the three periods required for this EO be scheduled consecutively.

c. Cadets who are qualified Advanced Aviation may assist with this instruction.

**PO 437**

1. **Performance**: Explain Aspects of Air Navigation

2. **Conditions**:

   a. Given:

      (1) Supervision, and

      (2) Assistance as required.

   b. Denied: Nil.

   c. Environmental: Classroom or training area large enough to accommodate the entire group.

3. **Standard**: The cadet will explain aspects of air navigation by:

   a. defining air navigation terms; and

   b. describing the magnetic compass.

4. **Remarks**: Nil.

5. **Complementary Material**:

   a. Complementary material associated with PO 437 is designed to enhance the cadet's knowledge of air navigation, specifically:

      (1) EO C437.01 (Solve Navigation Problems With a Manual Flight Computer), and

      (2) EO C437.02 (Use a Visual Flight Rules [VFR] Navigation Chart [VNC]).

   b. Complementary material from PO 337 that was not conducted in the previous year may be selected as complementary training in Proficiency Level Four.

THIS PAGE INTENTIONALLY LEFT BLANK

**EO M437.01**

1. **Performance**: Define Air Navigation Terms

2. **Conditions**:

   a. Given:

      (1) Supervision, and

      (2) Assistance as required.

   b. Denied: Nil.

   c. Environmental: Classroom or training area large enough to accommodate the entire group.

3. **Standard**: The cadet shall define:

   a. latitude and longitude,

   b. great circles,

   c. rhumb lines, and

   d. headings and bearings.

4. **Teaching Points**:

| TP | Description | Method | Time | Refs |
|---|---|---|---|---|
| TP1 | Define:<br>a. meridians of longitude,<br>b. parallels of latitude,<br>c. geographical co-ordinates, and<br>d. the relationship between time and longitude. | Interactive Lecture | 25 min | C3-116 (pp. 175–176) |
| TP2 | Define great circles and rhumb lines. | Interactive Lecture | 10 min | C3-116 (p. 177) |
| TP3 | Define headings and bearings. | Interactive Lecture | 5 min | C3-116 (p. 177) |
| TP4 | Have the cadets take headings and bearings. | In-Class Activity | 10 min | |

5. **Time**:

   a. Introduction / Conclusion: 10 min

   b. Interactive Lecture: 40 min

   c. In-Class Activity: 10 min

   d. Total: 60 min

6. **Substantiation**:

   a. An interactive lecture was chosen for TPs 1–3 to clarify, emphasize, and summarize navigation terms.

   b. An in-class activity was chosen for TP 4 as it is an interactive way to reinforce bearings and headings, and confirm the cadets' comprehension of navigation terms.

7. **References**: C3-116 ISBN 0-9680390-5-7 MacDonald, A. F., & Peppler, I. L. (2000). *From the ground up: Millennium edition*. Ottawa, ON: Aviation Publishers Co. Limited.

8. **Training Aids**:

   a. Presentation aids (eg, whiteboard / flip chart / OHP / multimedia projector) appropriate for the classroom / training area,

   b. Large globe with latitude and longitude markings, and

   c. Douglas protractor.

9. **Learning Aids**:

   a. Local VFR Navigation Chart (VNC),

   b. Douglas protractor,

   c. Pen / pencil, and

   d. Headings and Bearings worksheet.

10. **Test Details**: This EO is assessed IAW Chapter 3, Annex B, Aviation Subjects–Combined Assessment PC.

11. **Remarks**: Cadets who are qualified Advanced Aviation may assist with this instruction.

**EO M437.02**

1. **Performance**: Describe the Magnetic Compass

2. **Conditions**:

   a. Given:

      (1) Supervision, and

      (2) Assistance as required.

   b. Denied: Nil.

   c. Environmental: Classroom or training area large enough to accommodate the entire group.

3. **Standard**: The cadet shall describe the magnetic compass, to include:

   a. the Earth's magnetism,

   b. the main parts of the compass,

   c. variation, and

   d. compass errors.

4. **Teaching Points**:

| TP | Description | Method | Time | Refs |
|---|---|---|---|---|
| TP1 | Describe the Earth's magnetism. | Interactive Lecture | 5 min | C3-116 (pp. 177–178) |
| TP2 | Describe the main parts of the magnetic compass. | Interactive Lecture | 5 min | C3-116 (p. 179) |
| TP3 | Describe variation. | Interactive Lecture | 5 min | C3-116 (pp. 178–179) |
| TP4 | Describe compass errors. | Interactive Lecture | 10 min | C3-116 (pp. 179–182) |

5. **Time**:

   a. Introduction / Conclusion: 5 min

   b. Interactive Lecture: 25 min

   c. Total: 30 min

6. **Substantiation**: An interactive lecture was chosen for this lesson to clarify, emphasize, and summarize the magnetic compass.

7. **References**: C3-116 ISBN 0-9680390-5-7 MacDonald, A. F., & Peppler, I. L. (2000). *From the ground up: Millennium edition*. Ottawa, ON: Aviation Publishers Co. Limited.

8. **Training Aids**:

   a. Presentation aids (eg, whiteboard / flip chart / OHP / multimedia projector) appropriate for the classroom / training area, and

   b. Examples of magnetic compasses.

9. **Learning Aids**:

   a. Pen / pencil, and

   b. Magnetic Headings worksheet.

10. **Test Details**: This EO is assessed IAW Chapter 3, Annex B, Aviation Subjects–Combined Assessment PC.

11. **Remarks**: Cadets who are qualified Advanced Aviation may assist with this instruction.

**EO C437.01**

1. **Performance**: Solve Navigation Problems With a Manual Flight Computer

2. **Conditions**:

   a. Given:

      (1) Manual flight computer,

      (2) Supervision, and

      (3) Assistance as required.

   b. Denied: Nil.

   c. Environmental: Classroom or training area large enough to accommodate the entire group.

3. **Standard**: The cadet shall solve navigation problems with a manual flight computer by:

   a. converting units of measure; and

   b. calculating:

      (1) speed,

      (2) distance, and

      (3) time.

4. **Teaching Points**:

| TP | Description | Method | Time | Refs |
|---|---|---|---|---|
| TP1 | Demonstrate how to use a manual flight computer to convert units of measure and have the cadets practice converting units of measure. | Demonstration and Performance | 25 min | C3-116 (pp. 199–200) |
| TP2 | Demonstrate how to use a manual flight computer to calculate speed, distance, and time and have the cadets practice calculating speed, distance, and time. | Demonstration and Performance | 25 min | C3-116 (pp. 199–200) |

5. **Time**:

   a. Introduction / Conclusion: 10 min

   b. Demonstration and Performance: 50 min

   c. Total: 60 min

6. **Substantiation**: A demonstration and performance was chosen for this lesson as it allows the instructor to explain and demonstrate solving navigation problems with a manual flight computer while providing an opportunity for the cadets to practice this skill under supervision.

7. **References**: C3-116 ISBN 0-9680390-5-7 MacDonald, A. F., & Peppler, I. L. (2000). *From the ground up: Millennium edition*. Ottawa, ON: Aviation Publishers Co. Limited.

8. **Training Aids**:

   a. Presentation aids (eg, whiteboard / flip chart / OHP / multimedia projector) appropriate for the classroom / training area, and

   b. Manual flight computer.

9. **Learning Aids**:

   a. Pen / pencil,

   b. Manual flight computer, and

   c. Navigation problems worksheet.

10. **Test Details**: Nil.

11. **Remarks**:

   a. Assistant instructors may be required for this lesson.

   b. Cadets who are qualified Advanced Aviation may assist with this instruction.

**EO C437.02**

1. **Performance**: Use a Visual Flight Rules (VFR) Navigation Chart (VNC)

2. **Conditions**:

   a. Given:

      (1) VNC,

      (2) International Civil Aviation Organization (ICAO) ruler,

      (3) Douglas protractor,

      (4) Supervision, and

      (5) Assistance as required.

   b. Denied: Nil.

   c. Environmental: Classroom or training area large enough to accommodate the entire group.

3. **Standard**: The cadet shall use a VNC by:

   a. explaining types of projections;

   b. describing types of aeronautical charts;

   c. locating landmarks using latitude and longitude;

   d. plotting tracks between landmarks;

   e. measuring distances; and

   f. determining headings.

4. **Teaching Points**:

| TP | Description | Method | Time | Refs |
|---|---|---|---|---|
| TP1 | Explain types of projections. | Interactive Lecture | 5 min | C3-116 (pp. 184–186) |
| TP2 | Describe types of aeronautical charts. | Interactive Lecture | 5 min | C3-116 (pp. 186–188) |
| TP3 | Explain, demonstrate and have the cadets practice locating landmarks on a VNC using latitude and longitude. | Demonstration and Performance | 15 min | |
| TP4 | Explain, demonstrate and have the cadets practice plotting tracks between landmarks on a VNC. | Demonstration and Performance | 5 min | |
| TP5 | Explain, demonstrate and have the cadets practice measuring distances on a VNC. | Demonstration and Performance | 10 min | |

| TP | Description | Method | Time | Refs |
|---|---|---|---|---|
| TP6 | Explain, demonstrate and have the cadets practice determining headings on a VNC. | Demonstration and Performance | 10 min | |

5. **Time**:

| | | |
|---|---|---|
| a. | Introduction / Conclusion: | 10 min |
| b. | Interactive Lecture: | 10 min |
| c. | Demonstration and Performance: | 40 min |
| d. | Total: | 60 min |

6. **Substantiation**:

a. An interactive lecture was chosen for TPs 1 and 2 to clarify, emphasize, and summarize types of projections and aeronautical charts.

b. A demonstration and performance was chosen for TPs 3–6 as it allows the instructor to explain and demonstrate using a VNC while providing an opportunity for the cadets to practice using a VNC under supervision.

7. **References**: C3-116 ISBN 0-9680390-5-7 MacDonald, A. F., & Peppler, I. L. (2000). *From the ground up: Millennium edition*. Ottawa, ON: Aviation Publishers Co. Limited.

8. **Training Aids**:

a. Presentation aids (eg, whiteboard / flip chart / OHP / multimedia projector) appropriate for the classroom / training area,

b. Large globe with latitude and longitude markings,

c. Sheet of flip chart paper,

d. VNC,

e. World Aeronautical Chart,

f. VFR Terminal Area Chart,

g. Enroute Chart,

h. ICAO ruler, and

i. Douglas protractor.

9. **Learning Aids**:

a. Pencil,

b. VNC,

c. ICAO ruler,

d. Ruler,

e. Paper, and

f. Douglas protractor.

10. **Test Details**: Nil.

11. **Remarks**:

a. Assistant instructors may be required for this lesson.

b. Cadets who are qualified Advanced Aviation may assist with this instruction.

THIS PAGE INTENTIONALLY LEFT BLANK

**PO 440**

1. **Performance**: Discuss Aerospace Structures

2. **Conditions**:

   a. Given:

      (1) Supervision, and

      (2) Assistance as required.

   b. Denied: Nil.

   c. Environmental: Classroom or training area large enough to accommodate the entire group.

3. **Standard**: The cadet will discuss aerospace structures, to include:

   a. aerospace materials, and

   b. Canadian satellites.

4. **Remarks**: Nil.

5. **Complementary Material**:

   a. Complementary material associated with PO 440 is designed to enhance the cadet's knowledge of aerospace structures, specifically:

      (1) EO C440.01 (Describe Model Rocketry),

      (2) EO C440.02 (Launch a Small Model Rocket),

      (3) EO C440.03 (Discuss Characteristics of the Planets in the Solar System),

      (4) EO C440.04 (Apply the Material Science of Trusses),

      (5) EO C440.05 (Describe Robotics),

      (6) EO C440.06 (Use Star Charts),

      (7) EO C440.07 (Operate a Telescope),

      (8) EO C440.08 (Watch *BLAST! [Balloon-Borne Large Aperture Sub-Millimetre Telescope*]).

      (9) EO C440.09 (Describe the Relationship Between Gravity and Space-time),

      (10) EO C440.10 (Discuss Kinetic and Potential Energy), and

      (11) EO C440.11 (Watch *Einstein's Big Idea*).

   b. EO C440.01 (Describe Model Rocketry) must be conducted before EO C440.02 (Launch a Small Rocket).

   c. Complementary material from PO 340 that was not conducted in the previous year may be selected as complementary training in Proficiency Level Four.

THIS PAGE INTENTIONALLY LEFT BLANK

**EO M440.01**

1. **Performance**: Identify Aerospace Materials

2. **Conditions**:

   a. Given:

      (1) Supervision, and

      (2) Assistance as required.

   b. Denied: Nil.

   c. Environmental: Classroom or training area large enough to accommodate the entire group.

3. **Standard**: The cadet shall identify various aerospace materials, to include:

   a. aluminum,

   b. magnesium,

   c. titanium,

   d. stainless steel,

   e. fibreglass,

   f. aramid,

   g. carbon / graphite, and

   h. ceramic.

4. **Teaching Points**:

| TP | Description | Method | Time | Refs |
|---|---|---|---|---|
| TP1 | Discuss:<br>a. metals used in aerospace construction, to include:<br>(1) aluminum,<br>(2) magnesium,<br>(3) titanium, and<br>(4) stainless steel;<br>b. material tests, and<br>c. orbit environment. | Interactive Lecture | 15 min | C3-136 (pp. 2-1 to 2-15)<br>C3-294 |
| TP2 | Discuss composite materials used in aerospace construction, to include:<br>a. fibreglass,<br>b. aramid,<br>c. carbon / graphite, and<br>d. ceramic. | Interactive Lecture | 10 min | C3-136 (pp. 3-22 to<br>3-27) |

5. **Time**:

| | | |
|---|---|---|
| a. | Introduction / Conclusion: | 5 min |
| b. | Interactive Lecture: | 25 min |
| c. | Total: | 30 min |

6. **Substantiation**: An interactive lecture was chosen for this lesson to introduce the cadets to aerospace materials and to generate interest in the subject.

7. **References**:

   a. C3-136 ISBN 0-88487-207-6 Sanderson Training Systems. (2001). *A&P technician airframe textbook*. Englewood, CO: Jeppesen Sanderson Inc.

   b. C3-294 Silverman, E. M. (1995). *Space environmental effects on spacecraft: LEO materials selection guide*. Hampton, VA: NASA Langley Research Center. Retrieved November 27, 2008, from http://see.msfc.nasa.gov/mp/NASA-95-cr4661pt1.pdf

8. **Training Aids**:

   a. Presentation aids (eg, whiteboard / flip chart / OHP / multimedia projector) appropriate for the classroom / training area.

   b. Samples of materials, to include:

      (1) metals, to include:

         (a) aluminum,

         (b) magnesium steel,

         (c) titanium steel, and

         (d) stainless steel;

      (2) composite cloth, to include:

         (a) fibreglass,

         (b) aramid,

         (c) carbon / graphite, and

         (d) ceramic.

9. **Learning Aids**: Nil.

10. **Test Details**: Nil.

11. **Remarks**: Cadets who are qualified Advanced Aerospace may assist with this instruction.

**EO M440.02**

1. **Performance**: Describe Canadian Satellites

2. **Conditions**:

   a. Given:

      (1) Supervision, and

      (2) Assistance as required.

   b. Denied: Nil.

   c. Environmental: Classroom or training area large enough to accommodate the entire group.

3. **Standard**: The cadet shall describe Canadian satellites, to include:

   a. Alouette,

   b. Microvariability and Oscillation of Stars (MOST), and

   c. Radarsat.

4. **Teaching Points**:

| TP | Description | Method | Time | Refs |
|---|---|---|---|---|
| TP1 | Identify aspects of the Alouette program, to include:<br>a. history,<br>b. purpose, and<br>c. accomplishments. | Interactive Lecture | 5 min | C3-253 |
| TP2 | Identify aspects of the MOST mission, to include:<br>a. history,<br>b. purpose, and<br>c. accomplishments. | Interactive Lecture | 10 min | C3-254 |
| TP3 | Identify aspects of the RADARSAT program, to include:<br>a. history,<br>b. purpose, and<br>c. accomplishments. | Interactive Lecture | 10 min | C3-255 |

5. **Time**:

   a. Introduction / Conclusion: 5 min

   b. Interactive Lecture: 25 min

   c. Total: 30 min

6. **Substantiation**: An interactive lecture was chosen for this lesson to orient the cadets to Canadian satellites and to generate interest in the subject.

7. **References**:


a. C3-253 Canadian Space Agency. (2008). *Alouette I and II*. Retrieved September 29, 2008, from http://www.space.gc.ca/asc/eng/satellites/alouette.asp

b. C3-254 University of British Columbia. (2008). *MOST: Canada's first space telescope*. Retrieved September 29, 2008, from http://www.astro.ubc.ca/MOST/overview.html#glance

c. C3-255 Natural Resources Canada. (2008). *Canada centre for remote sensing: RADARSAT*. Retrieved September 29, 2008, from http://www.ccrs.nrcan.gc.ca/radar/spaceborne/radarsat1/index_e.php


8. **Training Aids**: Presentation aids (eg, whiteboard / flip chart / OHP / multimedia projector) appropriate for the classroom / training area.

9. **Learning Aids**: Nil.

10. **Test Details**: Nil.

11. **Remarks**: Cadets who are qualified Advanced Aerospace may assist with this instruction.

**EO C440.01**

1. **Performance**: Describe Model Rocketry

2. **Conditions**:

   a. Given:

      (1) Supervision, and

      (2) Assistance as required.

   b. Denied: Nil.

   c. Environmental: Classroom or training area large enough to accommodate the entire group.

3. **Standard**: The cadet shall describe model rocketry, to include:

   a. the parts of a model rocket engine,

   b. the parts of a model rocket,

   c. the flight profile of a model rocket, and

   d. model rocketry safety rules.

4. **Teaching Points**:

| TP | Description | Method | Time | Refs |
|---|---|---|---|---|
| TP1 | Describe the parts of a model rocket engine, to include:<br>a. engine case,<br>b. clay nozzle,<br>c. black powder propellant,<br>d. delay composition,<br>e. ejection charge, and<br>f. igniter. | Interactive Lecture | 15 min | C3-162<br>C3-259 |
| TP2 | Describe the parts of a model rocket, to include:<br>a. nose cone,<br>b. body tube,<br>c. fins,<br>d. launch lug,<br>e. engine stop,<br>f. engine restraint,<br>g. shock cord, and<br>h. parachute. | Interactive Lecture | 10 min | C3-162<br>C3-259 |

| TP | Description | Method | Time | Refs |
|---|---|---|---|---|
| TP3 | Describe the flight profile of a model rocket, to include:<br>a. ignition,<br>b. power,<br>c. coast / delay,<br>d. ejection,<br>e. descent, and<br>f. landing. | Interactive Lecture | 10 min | C3-162<br>C3-163<br>C3-259 |
| TP4 | Explain model rocketry safety rules. | Interactive Lecture | 15 min | C3-162<br>C3-259 |

5. **Time**:

   a. Introduction / Conclusion: 10 min

   b. Interactive Lecture: 50 min

   c. Total: 60 min

6. **Substantiation**: An interactive lecture was chosen for this lesson to present basic information on model rocketry and summarize the teaching points.

7. **References**:

   a. C3-162 Beach, T. (1993). *Model rocketry technical manual*. Retrieved October 10, 2007, from http://www.estesrockets.com/assets/downloads/roecketrytechniques.pdf

   b. C3-163 Cannon, R. L. (1999). *A learning guide for model rocket launch systems*. Retrieved October 10, 2007, from http://www.estesrockets.com/assets/downloads/launchsystemguide.pdf

   c. C3-259 ISBN 978-0471472421 Stine, G. H. (2004). *Handbook of model rocketry*. Toronto, ON: John Wiley & Sons.

8. **Training Aids**:

   a. Presentation aids (eg, whiteboard / flip chart / OHP / multimedia projector) appropriate for the classroom / training area,

   b. Model rocket cutaway,

   c. Model rocket kit,

   d. Model rocket engine, and

   e. Digital scale.

9. **Learning Aids**: Nil.

10. **Test Details**: Nil.

11. **Remarks**: Cadets who are qualified Advanced Aerospace may assist with this instruction.

**EO C440.02**

1. **Performance**: Launch a Small Model Rocket

2. **Conditions**:

   a. Given:

      (1) Cement for plastic models,

      (2) No. 11 hobby knife,

      (3) Pencil,

      (4) Scissors,

      (5) Small model rocket kit,

      (6) Supervision, and

      (7) Assistance as required.

   b. Denied: Nil.

   c. Environmental:

      (1) Classroom or training area large enough to accommodate the entire group, and

      (2) Outdoor training area IAW Canadian Association of Rocketry (CAR) standards.

3. **Standard**: The cadet shall:

   a. construct a small model rocket;

   b. assist in the set-up of the rocket launch site; and

   c. launch a small model rocket.

4. **Teaching Points**: Have the cadet, as a member of a pair:

   a. assemble a small model rocket;

   b. assist in the set-up of the rocket launch site; and

   c. launch a small model rocket.

5. **Time**:

| | | |
|---|---|---|
| a. | Introduction / Conclusion: | 10 min |
| b. | Practical Activity: | 80 min |
| c. | Total: | 90 min |

6. **Substantiation**: A practical activity was chosen for this lesson as it is an interactive way to introduce the cadets to constructing and launching model rockets in a safe, controlled environment.

7. **References**:

   a. C3-162 Beach, T. (1993). *Model rocketry technical manual*. Retrieved October 10, 2007, from http://www.estesrockets.com/assets/downloads/roecketrytechniques.pdf

b. C3-163 Cannon, R. L. (1999). *A learning guide for model rocket launch systems*. Retrieved October 10, 2007, from http://www.estesrockets.com/assets/downloads/launchsystemguide.pdf

c. C3-259 ISBN 978-0-471-47242-1 Stine, G. H. (2004). *Handbook of model rocketry*. Toronto, ON: John Wiley & Sons.

8. **Training Aids**:

a. Launch tower for a model rocket,

b. Launch controller for a model rocket,

c. 80 m of safety tape,

d. 18 modular tent pegs or a suitable substitute,

e. Safety glasses,

f. Voltmeter,

g. Pliers,

h. Screwdriver, and

i. Electrical tape.

9. **Learning Aids**:

a. Safety glasses,

b. Cement for plastic models,

c. No. 11 hobby knife,

d. Pencil, Scissors, and

e. Small model rocket kit.

10. **Test Details**: Nil.

11. **Remarks**:

a. EO C440.01 (Describe Model Rocketry) must also be selected and delivered prior to this lesson.

b. Cadets who are qualified Advanced Aerospace may assist with this instruction.

**EO C440.03**

1. **Performance**: Discuss Characteristics of the Planets in the Solar System

2. **Conditions**:

   a. Given:

      (1) Supervision, and

      (2) Assistance as required.

   b. Denied: Nil.

   c. Environmental: Classroom or training area large enough to accommodate the entire group.

3. **Standard**: The cadet shall discuss the characteristics of the planets in the solar system, to include:

   a. mean distance from the sun,

   b. size,

   c. mass,

   d. rotation,

   e. inclination, and

   f. orbit characteristics.

4. **Teaching Points**:

| TP | Description | Method | Time | Refs |
|---|---|---|---|---|
| TP1 | Discuss the planet Mercury, to include:<br>a. mean distance from the sun,<br>b. size,<br>c. mass,<br>d. rotation,<br>e. inclination, and<br>f. orbit characteristics. | Interactive Lecture | 5 min | C3-170<br>C3-288<br>C3-289 |
| TP2 | Discuss the planet Venus, to include:<br>a. mean distance from the sun,<br>b. size,<br>c. mass,<br>d. rotation,<br>e. inclination, and<br>f. orbit characteristics. | Interactive Lecture | 5 min | C3-170<br>C3-288<br>C3-289 |

| TP | Description | Method | Time | Refs |
|---|---|---|---|---|
| TP3 | Discuss the planet Earth, to include:<br>a. mean distance from the sun,<br>b. size,<br>c. mass,<br>d. rotation,<br>e. inclination, and<br>f. orbit characteristics. | Interactive Lecture | 10 min | C3-170<br>C3-288<br>C3-289 |
| TP4 | Discuss the planet Mars, to include:<br>a. mean distance from the sun,<br>b. size,<br>c. mass,<br>d. rotation,<br>e. inclination, and<br>f. orbit characteristics. | Interactive Lecture | 5 min | C3-170<br>C3-288<br>C3-289 |
| TP5 | Discuss the planet Jupiter, to include:<br>a. mean distance from the sun,<br>b. size,<br>c. mass,<br>d. rotation,<br>e. inclination, and<br>f. orbit characteristics. | Interactive Lecture | 10 min | C3-170<br>C3-288<br>C3-289 |
| TP6 | Discuss the planet Saturn, to include:<br>a. mean distance from the sun,<br>b. size,<br>c. mass,<br>d. rotation,<br>e. inclination, and<br>f. orbit characteristics. | Interactive Lecture | 5 min | C3-170<br>C3-288<br>C3-289 |
| TP7 | Discuss the planet Uranus, to include:<br>a. mean distance from the sun,<br>b. size,<br>c. mass,<br>d. rotation,<br>e. inclination, and<br>f. orbit characteristics. | Interactive Lecture | 5 min | C3-170<br>C3-288<br>C3-289 |

| TP | Description | Method | Time | Refs |
|---|---|---|---|---|
| TP8 | Discuss the planet Neptune, to include:<br>a. mean distance from the sun,<br>b. size,<br>c. mass,<br>d. rotation,<br>e. inclination, and<br>f. orbit characteristics. | Interactive Lecture | 5 min | C3-170<br>C3-288<br>C3-289 |

5. **Time**:

   a. Introduction / Conclusion: 10 min

   b. Interactive Lecture: 50 min

   c. Total: 60 min

6. **Substantiation**: An interactive lecture was chosen for this lesson to introduce the cadets to the characteristics of the planets in the solar system and to generate interest in the subject.

7. **References**:

   a. C3-170 Ottewell, G. The National Optical Observatory. (1998). *Thousand-yard model: Or, Earth as a peppercorn*. Retrieved October 16, 2007, from http://www.noao.edu/education/peppercorn/pcmain.html

   b. C3-288 Williams, D. NASA. (2008). *Planetary fact sheet–metric*. Retrieved October 14, 2008, from http://nssdc.gsfc.nasa.gov/planetary/factsheet/index.html

   c. C3-289 Williams, D. NASA. (2008). *Planetary fact sheet–ratio to earth values*. Retrieved October 14, 2008, from http://nssdc.gsfc.nasa.gov/planetary/factsheet/planet_table_ratio.html

8. **Training Aids**: Nil.

9. **Learning Aids**: Planet specification sheet.

10. **Test Details**: Nil.

11. **Remarks**:

    a. Planetary data is provided in detail at http://solarsystem.nasa.gov/planets/index.cfm

    b. Cadets who are qualified Advanced Aerospace may assist with this instruction.

THIS PAGE INTENTIONALLY LEFT BLANK

**EO C440.04**

1. **Performance**: Apply the Material Science of Trusses

2. **Conditions**:

   a. Given:

      (1) Legal-size graph paper,

      (2) Mechanical pencils,

      (3) Eraser,

      (4) 30-cm ruler,

      (5) Plastic protractor,

      (6) Marbles,

      (7) Suspended container mount,

      (8) Hot glue gun,

      (9) Hot glue sticks,

      (10) Hobby knife,

      (11) Uncooked spaghetti,

      (12) Supervision, and

      (13) Assistance as required.

   b. Denied: Nil.

   c. Environmental: Classroom or training area large enough to accommodate the entire group.

3. **Standard**: The cadet, in pairs, shall apply the material science of trusses by:

   a. designing a truss;

   b. constructing a truss; and

   c. testing a truss.

4. **Teaching Points**:

| TP | Description | Method | Time | Refs |
|---|---|---|---|---|
| TP1 | Explain the material science of trusses. | Interactive Lecture | 15 min | C3-331 |
| TP2 | Have the cadets, in pairs, design a truss. | Practical Activity | 15 min | |
| TP3 | Have the cadets, in pairs, construct and test a truss. | Practical Activity | 50 min | |

5. **Time**:

| | | |
|---|---|---|
| a. | Introduction / Conclusion: | 10 min |
| b. | Interactive Lecture: | 15 min |
| c. | Practical Activity: | 65 min |
| d. | Total: | 90 min |

6. **Substantiation**:

   a. An interactive lecture was chosen for TP 1 to generate interest in the material science of trusses and summarize the teaching point.

   b. A practical activity was chosen for TPs 2 and 3 as it is an interactive way to allow the cadets to design and test a truss in a safe and controlled environment.

7. **References**: C3-331 McMaster University YES I Can! Science Team. (2009). *How forces act on structures*. Retrieved February 19, 2009, from http://resources.yesican-science.ca/sts115/aboutforces.html

8. **Training Aids**:

   a. Presentation aids (eg, whiteboard / flip chart / OHP / multimedia projector) appropriate for the classroom / training area.

   b. Marbles, and

   c. Suspended container.

9. **Learning Aids**:

   a. Legal-size graph paper,

   b. Mechanical pencils,

   c. Eraser,

   d. 30-cm ruler,

   e. Plastic protractor,

   f. Marbles,

   g. Suspended container mount,

   h. Hot glue gun,

   i. Hot glue sticks,

   j. Hobby knife, and

   k. Uncooked spaghetti.

10. **Test Details**: Nil.

11. **Remarks**:

   a. This lesson should be taught in three consecutive periods.

   b. Cadets who are qualified Advanced Aerospace may assist with this instruction.

**EO C440.05**

1. **Performance**: Describe Robotics

2. **Conditions**:

   a. Given:

      (1) Supervision, and

      (2) Assistance as required.

   b. Denied: Nil.

   c. Environmental: Classroom or training area large enough to accommodate the entire group.

3. **Standard**: The cadet shall describe robotics, to include:

   a. types of robots, and

   b. robotic applications.

4. **Teaching Points**:

| TP | Description | Method | Time | Refs |
|---|---|---|---|---|
| TP1 | Describe types of robots, to include:<br>a. autonomous systems, and<br>b. remote-controlled systems. | Interactive Lecture | 10 min | C3-292 |
| TP2 | Describe robotic applications, to include:<br>a. industrial fabrication, to include:<br>(1) machining,<br>(2) cutting,<br>(3) assembling, and<br>(4) welding,<br>b. exploration,<br>c. space,<br>d. emergency services, and<br>e. military. | Interactive Lecture | 15 min | C3-292 |

5. **Time**:

   a. Introduction: 5 min

   b. Interactive Lecture: 25 min

   c. Total: 30 min

6. **Substantiation**: An interactive lecture was chosen for this lesson to give the cadets an overview of robotics and to generate interest in the subject.

7. **References**: C3-292 NASA. (2003). *Rover ranch: K-12 experiments in robotic software*. Retrieved November 20, 2008, from http://prime.jsc.nasa.gov/ROV/

8. **Training Aids**: Presentation aids (eg, whiteboard / flip chart / OHP / multimedia projector) appropriate for the classroom / training area.

9. **Learning Aids**: Nil.

10. **Test Details**: Nil.

11. **Remarks**: Cadets who are qualified Advanced Aerospace may assist with this instruction.

**EO C440.06**

1. **Performance**: Use Star Charts

2. **Conditions**:

   a. Given:

      (1) Planisphere,

      (2) Red-filtered flashlight,

      (3) Star charts,

      (4) Supervision, and

      (5) Assistance as required.

   b. Denied: Nil.

   c. Environmental:

      (1) Classroom or training area large enough to accommodate the entire group, and

      (2) An open outdoor area with clear sky, at night, away from light pollution.

3. **Standard**: The cadet shall use star charts to identify elements of the night sky.

4. **Teaching Points**:

| TP | Description | Method | Time | Refs |
|---|---|---|---|---|
| TP1 | Explain how the celestial sphere is divided, to include:<br>a. how earth and sky are assumed to be concentric,<br>b. celestial poles, and<br>c. celestial equator. | Interactive Lecture | 5 min | C3-176 (p. 168)<br>C3-179 (pp. 28–29) |
| TP2 | Explain how the sphere of the sky is represented on star charts, to include:<br>a. declination,<br>b. right ascension, and<br>c. the plane of the ecliptic. | Interactive Lecture | 5 min | C3-176 (pp. 212–217)<br>C3-179 (pp. 99–119) |
| TP3 | Explain how to interpret a star chart, to include:<br>a. date,<br>b. time,<br>c. latitude,<br>d. orientation, and<br>e. planets. | Interactive Lecture | 5 min | C3-176 (pp. 212–217)<br>C3-179 (pp. 99–119) |

| TP | Description | Method | Time | Refs |
|---|---|---|---|---|
| TP4 | Explain, demonstrate and have the cadets identify elements of the night sky by exploring aspects of a planisphere, to include:<br>a. planisphere design,<br>b. the lack of planetary data on a planisphere,<br>c. date,<br>d. time,<br>e. midnight time mark,<br>f. latitude,<br>g. orientation,<br>h. horizon,<br>i. constellations, and<br>j. stars. | Demonstration and Performance | 40 min | C3-180 (p. 1)<br>C3-221 |

5. **Time**:

| | | |
|---|---|---|
| a. | Introduction / Conclusion: | 5 min |
| b. | Interactive Lecture: | 15 min |
| c. | Demonstration and Performance: | 40 min |
| d. | Total: | 60 min |

6. **Substantiation**:

a. An interactive lecture was chosen for TPs 1–3 to introduce the cadets to star charts and give an overview of the subject.

b. A demonstration and performance was chosen for TP 4 as it allows the instructor to explain and demonstrate planisphere use while providing an opportunity for the cadets to practice the skill under supervision.

7. **References**:

a. C3-176 ISBN 1-55407-071-6 Moore, P. (2005). *Atlas of the universe*. Richmond Hill, ON: Firefly Books.

b. C3-179 ISBN 1-55209-302-6 Dickenson, T. (2001). *Night watch: A practical guide to viewing the universe*. Willowdale, ON: Firefly Books.

c. C3-180 ISBN 1-55297-853-2 Scagell, R. (2004). *Firefly planisphere: Latitude 42 deg N*. Willowdale, ON: Firefly Books.

d. C3-221 National Research Council of Canada. (2007). *Explore the night sky*. Retrieved December 3, 2007, from http://www.nrc-cnrc.gc.ca/eng/education/astronomy/constellations/html.html

8. **Training Aids**:

   a. Presentation aids (eg, whiteboard / flip chart / OHP / multimedia projector) appropriate for the classroom / training area,

   b. Planisphere star chart,

   c. Red-filtered flashlight,

   d. Star charts and

   e. Desktop globe.

9. **Learning Aids**:

   a. Planisphere star chart,

   b. Red-filtered flashlight, and

   c. Star charts.

10. **Test Details**: Nil.

11. **Remarks**:

   a. TPs 1–3 may be taught in the classroom or in the field, as appropriate.

   b. Cadets who are qualified Advanced Aerospace may assist with this instruction.

THIS PAGE INTENTIONALLY LEFT BLANK

**EO C440.07**

1. **Performance**: Operate a Telescope

2. **Conditions**:

   a. Given:

      (1) Telescope,

      (2) Supervision, and

      (3) Assistance as required.

   b. Denied: Nil.

   c. Environmental: Classroom or training area large enough to accommodate the entire group.

3. **Standard**: The cadet shall operate a telescope by:

   a. setting up a telescope;

   b. operating a telescope; and

   c. dismantling a telescope.

4. **Teaching Points**:

| TP | Description | Method | Time | Refs |
|---|---|---|---|---|
| TP1 | Identify the parts of a telescope, to include:<br>a. optical tube,<br>b. optical tube mounts, to include:<br>(1) equatorial (one axis of movement) mount, and<br>(2) altazimuth (two axes of movement) mount;<br>c. finderscope,<br>d. eyepiece,<br>e. lens cover,<br>f. mirrors,<br>g. lenses,<br>h. focus knob,<br>i. tripod, and<br>j. specialty computerized telescope parts, to include:<br>(1) control panel,<br>(2) on / off switch,<br>(3) computer interface port, and<br>(4) power cord. | Interactive Lecture | 10 min | C3-286 (pp. 5–14) |

| TP | Description | Method | Time | Refs |
|---|---|---|---|---|
| TP2 | Describe telescope theory, to include:<br>a. safety, to include:<br>(1) never looking at the sun through a lens; and<br>(2) careful handling of fragile equipment;<br>b. what the numbers represent, to include:<br>(1) light gathering of main lens or mirror (aperture),<br>(2) focal length, and<br>(3) focal ratio;<br>c. seeing, to include:<br>(1) image shaking, and<br>(2) shimmering (atmospheric turbulence); and<br>d. the three main types of telescope optical systems, to include:<br>(1) refractors,<br>(2) Newtonian reflectors, and<br>(3) Schmidt-Cassegrains. | Interactive Lecture | 10 min | C3-179 (pp. 60–81)<br>C3-286 (p. 4, pp. 30–37) |
| TP3 | Explain, demonstrate and have the cadets:<br>a. set up a telescope by:<br>(1) removing all parts from their containers, ensuring that the optical tube is placed on a sturdy level surface;<br>(2) setting up the tripod;<br>(3) attaching the telescope to the tripod;<br>(4) attaching the finderscope (if required);<br>(5) attaching the eyepiece (if required);<br>(6) aligning the finderscope; and<br>(7) aligning the telescope; and<br>b. operate and dismantle a telescope by:<br>(1) adjusting the right ascension;<br>(2) adjusting the declination;<br>(3) removing the eyepiece (if required);<br>(4) removing the finderscope (if required);<br>(5) removing the telescope from its tripod; | Demonstration and Performance | 30 min | C3-286 (pp. 6–14) |

| TP | Description | Method | Time | Refs |
|---|---|---|---|---|
| | (6) collapsing the tripod; and<br>(7) returning all parts to their containers. | | | |

5. **Time**:

| | | |
|---|---|---|
| a. | Introduction / Conclusion: | 10 min |
| b. | Interactive Lecture: | 20 min |
| c. | Demonstration and Performance: | 30 min |
| d. | Total: | 60 min |

6. **Substantiation**:

   a. An interactive lecture was chosen for TPs 1 and 2 to orient the cadets to telescope theory and generate interest in the subject.

   b. A demonstration and performance was chosen for TP 3 as it allows the instructor to explain and demonstrate the telescope-handling skills the cadets are expected to acquire while providing an opportunity for the cadets to practice the skill under supervision.

7. **References**:

   a. C3-179 ISBN 1-55209-302-6 Dickenson, T. (2001). *Night watch: A practical guide to viewing the universe*. Willowdale, ON: Firefly Books.

   b. C3-286 11073-INST. Celestron. (2006). *CPC series instructional manual*. Torrance, CA: Celestron.

8. **Training Aids**:

   a. Presentation aids (eg, whiteboard / flip chart / OHP / multimedia projector) appropriate for the classroom / training area, and

   b. Telescope.

9. **Learning Aids**: Telescope.

10. **Test Details**: Nil.

11. **Remarks**: Cadets who are qualified Advanced Aerospace may assist with this instruction.

THIS PAGE INTENTIONALLY LEFT BLANK

**EO C440.08**

1. **Performance**: Watch *BLAST! (Balloon-Borne Large Aperture Sub- Millimetre Telescope*)

2. **Conditions**:

   a. Given:

      (1) *BLAST!* DVD

      (2) Supervision, and

      (3) Assistance as required.

   b. Denied: Nil.

   c. Environmental: Classroom or training area large enough to accommodate the entire group.

3. **Standard**: The cadet shall watch *BLAST!* and discuss the BLAST mission, to include:

   a. galactic cosmology,

   b. extragalactic cosmology, and

   c. BLAST mission design.

4. **Teaching Points**:

| TP | Description | Method | Time | Refs |
|---|---|---|---|---|
| TP1 | Describe the BLAST mission, to include:<br>a. observation of star formation;<br>b. observation of galaxy formation; and<br>c. the BLAST mission design. | Interactive Lecture | 10 min | C3-298 |
| TP2 | Have the cadets watch *BLAST!* | In-Class Activity | 55 min | C3-295 |
| TP3 | Discuss the science and the design of the BLAST mission. | Group Discussion | 15 min | |

5. **Time**:

   a. Introduction: 10 min

   b. Interactive Lecture: 10 min

   c. In-Class Activity: 55 min

   d. Group Discussion: 15 min

   e. Total: 90 min

6. **Substantiation**:

   a. An interactive lecture was chosen for TP 1 to introduce the cadets to cosmology and give an overview of the BLAST mission.

   b. An in-class activity was chosen for TP 2 as it as it is an interactive way to reinforce cosmology, provoke thought and stimulate interest among cadets.

   c. A group discussion was chosen for TP 3 as it allows the cadets to interact with their peers and share their knowledge, experiences, opinions, and feelings about cosmology using a balloon-borne large aperture sub-millimetre telescope.

7. **References**:

   a. C3-295 Devlin, P. (Producer & Director). (2008). *BLAST!* [Motion picture]. United States: The ArtistShare Project.

   b. C3-298 *BLAST (Balloon-Borne Large Aperture Sub-Millimetre Telescope)*. University of Pennsylvania Department of Physics and Astronomy. Retrieved January 30, 2009, from http://blastexperiment.info/

8. **Training Aids**:

   a. Presentation aids (eg, whiteboard / flip chart / OHP / multimedia projector) appropriate for the classroom / training area, and

   b. *BLAST!* DVD.

9. **Learning Aids**: Nil.

10. **Test Details**: Nil.

11. **Remarks**:

   a. It is recommended that this EO be presented in three consecutive periods.

   b. If EO C440.07 (Operate a Telescope) is selected, it is recommended that it be presented prior to this lesson.

**EO C440.09**

1. **Performance**: Describe the Relationship Between Gravity and Space-Time

2. **Conditions**:

   a. Given:

      (1) Supervision, and

      (2) Assistance as required.

   b. Denied: Nil.

   c. Environmental: Classroom or training area large enough to accommodate the entire group.

3. **Standard**: The cadet shall describe the relationship between gravity and space-time, to include:

   a. classical explanations of gravity, and

   b. relativistic explanations of gravity and space-time.

4. **Teaching Points**:

| TP | Description | Method | Time | Refs |
|---|---|---|---|---|
| TP1 | Compare early ideas of gravity to gravitation under the theory of relativity, to include:<br>a. Newton's Universal Law of Gravitation,<br>b. gravity as a force between masses,<br>c. instantaneous transmission of gravity,<br>d. the interdependence of space and time, and<br>e. curvature of space-time. | Interactive Lecture | 10 min | C3-310<br>C3-312 |
| TP2 | Describe the Gravity Probe B (GP-B) mission, to include:<br>a. gyroscope operation,<br>b. the spin-axis of a gyroscope,<br>c. geodetic effect,<br>d. frame-dragging effect,<br>e. spacecraft components, and<br>f. Canada's contribution to orientation control. | Interactive Lecture | 10 min | C3-310<br>C3-312 |
| TP3 | Have the cadets watch *Testing Einstein's Universe* while finding answers to assigned questions, to include:<br>a. tests of the 20th century,<br>b. the concept of GP-B, | In-Class Activity | 25 min | C3-311 |

| TP | Description | Method | Time | Refs |
|---|---|---|---|---|
| | c. mechanics of GP-B, and<br>d. components of the GP-B spacecraft. | | | |
| TP4 | Conduct an activity to correct answers to the assigned questions. | In-Class Activity | 5 min | C3-310 |

5. **Time**:

| | | |
|---|---|---|
| a. | Introduction: | 10 min |
| b. | Interactive Lecture: | 20 min |
| c. | In-Class Activity: | 30 min |
| d. | Total: | 60 min |

6. **Substantiation**:

   a. An interactive lecture was chosen for TPs 1 and 2 to introduce theories of gravitation and give an overview of the Gravity Probe B mission.

   b. An in-class activity was chosen for TPs 3 and 4 as it as it is an interactive way to reinforce the relationship between gravity and space-time, provoke thought, and stimulate interest among cadets.

7. **References**:

   a. C3-310 Range, S. K. (2004). *Gravity Probe B: An educator's guide*. Washington, DC: NASA. Retrieved February 6, 2009, from http://einstein.stanford.edu/RESOURCES/education-index.html#guide

   b. C3-311 Bartel, N. (Producer & Director). (2003). *Testing Einstein's universe* [Motion picture]. Canada: York University.

   c. C3-312 Range, S. K. (2008). *Gravity Probe B: Testing Einstein's universe*. Retrieved February 6, 2009, from http://einstein.stanford.edu/index.html

8. **Training Aids**:

   a. Presentation aids (eg, whiteboard / flip chart / OHP / multimedia projector) appropriate for the classroom / training area,

   b. WMV video file *Newtons_Universe_Anima* from Reference C3-312,

   c. WMV video file *Einsteins_Universe_Anima* from Reference C3-312,

   d. WMV video file *Rel_gyro_expt-anima* from Reference C3-312,

   e. WMV video file *Simple_expt_anima* from Reference C3-312,

   f. WMV video file *DF-Satellite* from Reference C3-312,

   g. WMV video file *SConSquid* from Reference C3-312, and

   h. *Testing Einstein's Universe* DVD.

9. **Learning Aids**: Nil.

10. **Test Details**: Nil.

11. **Remarks**: Nil.

THIS PAGE INTENTIONALLY LEFT BLANK

**EO C440.10**

1. **Performance**: Discuss Kinetic and Potential Energy

2. **Conditions**:

   a. Given:

      (1) Supervision, and

      (2) Assistance as required.

   b. Denied: Nil.

   c. Environmental: Classroom or training area large enough to accommodate the entire group.

3. **Standard**: The cadet shall discuss kinetic and potential energy, to include:

   a. storage and conversion of energy, to include:

      (1) gravitational potential energy, and

      (2) elastic potential energy; and

   b. expenditure of energy, to include the effects of:

      (1) velocity, and

      (2) mass.

4. **Teaching Points**:

| TP | Description | Method | Time | Refs |
|---|---|---|---|---|
| TP1 | Explore the storage and conversion of kinetic and potential energy in a gravitational system. | In-Class Activity | 5 min | C3-262 |
| TP2 | Explore the storage and conversion of kinetic and potential energy in an elastic system. | In-Class Activity | 5 min | C3-262 |
| TP3 | Explore the effects of velocity and mass in the expenditure of energy. | In-Class Activity | 15 min | C3-263 |

5. **Time**:

   a. Introduction / Conclusion: 5 min

   b. In-Class Activity: 25 min

   c. Total: 30 min

6. **Substantiation**: An in-class activity was chosen for this lesson as it is an interactive way to provoke thought about energy and stimulate interest in kinetic and potential energy among cadets.

7. **References**:

   a. C3-262 Canadian Space Agency. (2003). *Orbital mechanics: Energy*. Retrieved September 30, 2008, from http://www.space.gc.ca/eng/educators/resources/orbital/energy.asp

b. C3-263 EG-1997-10-116-HQ NASA. (1997). *Exploring the moon: A teacher's guide with activities*. Retrieved September 30, 2008, from http://lunar.arc.nasa.gov/education/pdf/expmoon.pdf

8. **Training Aids**:

a. Elastic bands,

b. Yo-yos,

c. Plastic tub approximately 7.5 cm deep, 25 cm wide and 30 cm long,

d. Sand (1 / 2 tub),

e. Cornstarch (1 / 2 tub),

f. Ruler marked in millimetres, and

g. Impacters, to include:

(1) marbles of various sizes,

(2) ball bearings of various sizes,

(3) wooden balls of various sizes, and

(4) golf balls.

9. **Learning Aids**:

a. Elastic bands, and

b. Yo-yo.

10. **Test Details**: Nil.

11. **Remarks**: Cadets who are qualified Advanced Aerospace may assist with this instruction.

**EO C440.11**

1. **Performance**: Watch *Einstein's Big Idea*

2. **Conditions**:

   a. Given:

      (1) Supervision, and

      (2) Assistance as required.

   b. Denied: Nil.

   c. Environmental: Classroom or training area large enough to accommodate the entire group.

3. **Standard**: The cadet shall watch *Einstein's Big Idea* and discuss the history of the formula $E=mc^2$, to include:

   a. development of physics,

   b. applications of nuclear physics, and

   c. history of the principle investigators.

4. **Teaching Points**:

| TP | Description | Method | Time | Refs |
|---|---|---|---|---|
| TP1 | Conduct an activity where the cadets:<br>a. define the word "energy";<br>b. describe what kinds of energy they have used today; and<br>c. describe the difference between sources of energy (eg, sun, wood, oil, wind, or food) and energy itself (eg, light, heat, electrical or mechanical action). | In-Class Activity | 5 min | C3-319 (p. 3) |
| TP2 | Have the cadets determine that atoms of matter have mass by:<br>a. examining a list of common materials;<br>b. determining what elements are in those materials;<br>c. locating the elements in a periodic table; and<br>d. determining the mass of those elements' atoms. | In-Class Activity | 10 min | C3-319 (p. 3) |
| TP3 | Have the cadets watch *Einstein's Big Idea* and make notes on topics assigned, to include:<br>a. energy,<br>b. mass,<br>c. light, | In-Class Activity | 110 min | C3-320 |

| TP | Description | Method | Time | Refs |
|---|---|---|---|---|
| | d. velocity,<br>e. development of the equation $E=mc^2$, and<br>f. confirmation of the equation $E=mc^2$. | | | |
| TP4 | Conduct an activity to create a timeline of the development of the formula $E=mc^2$. | In-Class Activity | 15 min | C3-319 (pp. 4–5) |

5. **Time**:

   a. Introduction / Conclusion: 10 min

   b. In-Class Activity: 140 min

   c. Total: 150 min

6. **Substantiation**: An in-class activity was chosen for this lesson as it is an interactive way to provoke thought and stimulate interest among cadets about the development of the formula $E=mc^2$.

7. **References**:

   a. C3-319 NOVA. (2005). *Teacher's guide: Einstein's big idea*. Retrieved January 30, 2009 from http://www.pbs.org/wgbh/nova/einstein/

   b. C3-320 Johnstone, G. (Producer & Director). (2005). *Einstein's big idea* [Motion picture]. United States: WBGH Educational Foundation.

8. **Training Aids**:

   a. Presentation aids (eg, whiteboard / flip chart / OHP / multimedia projector) appropriate for the classroom / training area, and

   b. *Einstein's Big Idea* DVD.

9. **Learning Aids**:

   a. Periodic table, and

   b. Note template handout.

10. **Test Details**: Nil.

11. **Remarks**:

   a. If EO C440.09 (Describe the Relationship Between Gravity and Space-Time) or EO C440.10 (Discuss Kinetic and Potential Energy) are also selected, they should be presented prior to this lesson to introduce concepts of energy.

   b. It is recommended that Chapters 1–6 of *Einstein's Big Idea* be presented in three consecutive periods and Chapters 7–9 be presented in two consecutive periods, all on two consecutive training days.

**PO 460**

1. **Performance**: Describe Aerodrome Operations Career Opportunities

2. **Conditions**:

   a. Given:

      (1) Supervision, and

      (2) Assistance as required.

   b. Denied: Nil.

   c. Environmental: Classroom or training area large enough to accommodate the entire group.

3. **Standard**: The cadet will identify aerodrome operations career opportunities.

4. **Remarks**: Nil.

5. **Complementary Material**:

   a. This PO is complementary material designed to provide an opportunity for the cadets to continue to develop knowledge and skills related to aerodrome operations, specifically:

      (1) EO C460.01 (Describe Aerodrome Operations Career Opportunities),

      (2) EO C460.02 (Describe Air Traffic Control [ATC] Career Opportunities), and

      (3) EO C460.03 (Describe Airport Security Career Opportunities).

   b. Complementary material from PO 360 that was not conducted in the previous year may be selected as complementary training in Proficiency Level Four.

THIS PAGE INTENTIONALLY LEFT BLANK

**EO C460.01**

1. **Performance**: Describe Aerodrome Operations Career Opportunities

2. **Conditions**:

   a. Given:

      (1) Supervision, and

      (2) Assistance as required.

   b. Denied: Nil.

   c. Environmental: Classroom or training area large enough to accommodate the entire group.

3. **Standard**: The cadet shall:

   a. describe aerodrome operations career opportunities;

   b. discuss the skills and training required; and

   c. identify training institutions.

4. **Teaching Points**:

| TP | Description | Method | Time | Refs |
|---|---|---|---|---|
| TP1 | Have the cadets brainstorm aerodrome operations career opportunities. | In-Class Activity | 10 min | |
| TP2 | Conduct a group discussion on aerodrome operations career opportunities, specifically:<br>a. skills and training required, and<br>b. training institutions. | Group Discussion | 15 min | C3-309<br>C3-313 |

5. **Time**:

   a. Introduction / Conclusion: 5 min

   b. In-Class Activity: 10 min

   c. Group Discussion: 15 min

   d. Total: 30 min

6. **Substantiation**:

   a. An in-class activity was chosen for TP 1 as it is an interactive way to provoke thought and stimulate interest among cadets.

   b. A group discussion was chosen for TP 2 as it is allows the cadets to interact with their peers and share their knowledge, experiences, opinions, and feelings on aerodrome operations career opportunities.

7. **References**:

   a. C3-309 Avjobs.com. (2009). *Aviation career overviews*. Retrieved February 9, 2009, from http://www.avjobs.com/careers/index.asp

   b. C3-313 Canadian Airports Council. (2009). *Post secondary programs*. Retrieved February 9, 2009, from http://www.cacairports.ca/english/careers/post_secondary_programs.php

8. **Training Aids**:

   a. Presentation aids (eg, whiteboard / flip chart / OHP / multimedia projector) appropriate for the classroom / training area, and

   b. Markers.

9. **Learning Aids**: Nil.

10. **Test Details**: Nil.

11. **Remarks**: If available, a guest speaker from the field of aerodrome operations may be used for this lesson.

**EO C460.02**

1. **Performance**: Describe Air Traffic Control (ATC) Career Opportunities

2. **Conditions**:

   a. Given:

      (1) Supervision, and

      (2) Assistance as required.

   b. Denied: Nil.

   c. Environmental: Classroom or training area large enough to accommodate the entire group.

3. **Standard**: The cadet shall describe ATC career opportunities, to include:

   a. the selection requirements,

   b. the selection process, and

   c. the training process.

4. **Teaching Points**:

| TP | Description | Method | Time | Refs |
|---|---|---|---|---|
| TP1 | Have the cadets brainstorm ATC career opportunities. | In-Class Activity | 10 min | |
| TP2 | Conduct a group discussion on ATC career opportunities, to include:<br>a. selection requirements,<br>b. selection process, and<br>c. training process. | Group Discussion | 15 min | C3-332 |

5. **Time**:

   a. Introduction / Conclusion: 5 min

   b. In-Class Activity: 10 min

   c. Group Discussion: 15 min

   d. Total: 30 min

6. **Substantiation**:

   a. An in-class activity was chosen for TP 1 as it is an interactive way to provoke thought and stimulate interest in ATC career opportunities among cadets.

   b. A group discussion was chosen for TP 2 as it allows the cadets to interact with their peers and share their knowledge, opinions and feelings about ATC career opportunities.

7. **References**: C3-332 NAV CANADA. (2009). *Take charge of your career*. Retrieved February 23, 2009, from http://takecharge.navcanda.ca

8. **Training Aids**: Presentation aids (eg, whiteboard / flip chart / OHP / multimedia projector) appropriate for the classroom / training area.

9. **Learning Aids**: Nil.

10. **Test Details**: Nil.

11. **Remarks**: If available, a guest speaker from the field of air traffic control may be used for this lesson.

**EO C460.03**

1. **Performance**: Describe Airport Security Career Opportunities

2. **Conditions**:

   a. Given:

      (1) Supervision, and

      (2) Assistance as required.

   b. Denied: Nil.

   c. Environmental: Classroom or training area large enough to accommodate the entire group.

3. **Standard**: The cadet shall:

   a. describe airport security career opportunities;

   b. discuss the skills and training required; and

   c. identify training institutions.

4. **Teaching Points**:

| TP | Description | Method | Time | Refs |
|---|---|---|---|---|
| TP1 | Have the cadets brainstorm airport security career opportunities. | In-Class Activity | 10 min | |
| TP2 | Conduct a group discussion on airport security career opportunities, specifically:<br>a. skills and training required, and<br>b. training institutions. | Group Discussion | 15 min | C3-309<br>C3-316<br>C3-317 |

5. **Time**:

   a. Introduction / Conclusion: 5 min

   b. In-Class Activity: 10 min

   c. Group Discussion: 15 min

   d. Total: 30 min

6. **Substantiation**:

   a. An in-class activity was chosen for TP 1 as it is an interactive way to provoke thought and stimulate interest among cadets.

   b. A group discussion was chosen for TP 2 as it is allows the cadets to interact with their peers and share their knowledge, experiences, opinions, and feelings on airport security career opportunities.

7. **References**:


a. C3-309 Avjobs.com. (2009). *Aviation career overviews*. Retrieved February 9, 2009, from http://www.avjobs.com/careers/index.asp

b. C3-316 Canadian Air Transport Security Authority. (2008). *Screening officers – Roles and responsibilities*. Retrieved February 10, 2009, from http://www.catsa-acsta.gc.ca/so-ac/english/roles/

c. C3-317 Canadian Air Transport Security Authority. (2009). *Employment opportunities*. Retrieved February 10, 2009, from http://www.catsa-acsta.gc.ca/english/about_propos/opp/index.cfm


8. **Training Aids**: Presentation aids (eg, whiteboard / flip chart / OHP / multimedia projector) appropriate for the classroom / training area.

9. **Learning Aids**: Nil.

10. **Test Details**: Nil.

11. **Remarks**: If available, a guest speaker from the field of airport security may be used for this lesson.

**PO 470**

1. **Performance**: Discuss Aspects of Aircraft Manufacturing and Maintenance

2. **Conditions**:

   a. Given:

      (1) Supervision, and

      (2) Assistance as required.

   b. Denied: Nil.

   c. Environmental: Classroom or training area large enough to accommodate the entire group.

3. **Standard**: The cadet will discuss aspects of aircraft manufacturing and maintenance.

4. **Remarks**: Nil.

5. **Complementary Material**:

   a. This PO is complementary material designed to provide an opportunity for the cadets to continue to develop knowledge and skills related to aircraft manufacturing and maintenance, specifically:

      (1) EO C470.01 (Discuss Aircraft Manufacturers),

      (2) EO C470.02 (Discuss Aircraft Assembly),

      (3) EO C470.03 (Identify Aviation Hardware), and

      (4) EO C470.04 (Disassemble and Reassemble a Small Engine).

   b. Complementary material from PO 370 that was not conducted in the previous year may be selected as complementary training in Proficiency Level Four.

THIS PAGE INTENTIONALLY LEFT BLANK

**EO C470.01**

1. **Performance**: Discuss Aircraft Manufacturers

2. **Conditions**:

   a. Given:

      (1) Supervision, and

      (2) Assistance as required.

   b. Denied: Nil.

   c. Environmental: Classroom or training area large enough to accommodate the entire group.

3. **Standard**: The cadet shall:

   a. discuss international partnerships between aircraft manufacturers; and

   b. identify unmanned aerial vehicle (UAV) manufacturers.

4. **Teaching Points**:

| TP | Description | Method | Time | Refs |
|---|---|---|---|---|
| TP1 | Conduct an activity where the cadets will:<br>a. review a summary of an international partnership between aircraft manufacturers; and<br>b. make a short oral presentation on the international partnership. | In-Class Activity | 20 min | C3-321<br>C3-322<br>C3-323 |
| TP2 | Identify UAV manufacturers. | Interactive Lecture | 5 min | C3-324 |

5. **Time**:

   a. Introduction / Conclusion: 5 min

   b. In-Class Activity: 20 min

   c. Interactive Lecture: 5 min

   d. Total: 30 min

6. **Substantiation**:

   a. An in-class activity was chosen for TP 1 as it is an interactive way to provoke thought and stimulate interest among cadets.

   b. An interactive lecture was chosen for TP 2 to identify UAV manufacturers.

7. **References**:


a. C3-321 ISBN 978-2-921393-91-1 Bombardier Inc. (2009). *Canada's Bombardier*. Canada: Bombardier Inc.

b. C3-322 Government of Canada. (2008). *Canada's aerospace advantages*. Retrieved February 10, 2009 from http://investincanada.gc.ca/eng/industry-sectors/advanced-manufacturing/aerospace/aerospace-advantages.aspx

c. C3-323 Industry Canada. (2009). *Aerospace in Canada*. Retrieved February 10, 2009 from http://www.ic.gc.ca/eic/site/ad-ad.nsf/eng/ad03909.html

d. C3-324 Thirty Thousand Feet Aviation Directory. (2009). *Unmanned aerial vehicles*. Retrieved February 10, 2009, from http://www.thirtythousandfeet.com/uav.htm


8. **Training Aids**:

a. Presentation aids (eg, whiteboard / flip chart / OHP / multimedia projector) appropriate for the classroom / training area, and

b. List of international partnerships.

9. **Learning Aids**:

a. Pen / pencil, and

b. List of international partnerships,

c. International Partnerships Summary Sheets, and

d. UAV Manufacturers Worksheet.

10. **Test Details**: Nil.

11. **Remarks**: Cadets who are qualified Advanced Aviation Technology – Aircraft Manufacturing and Maintenance may be able to assist with this lesson.

**EO C470.02**

1. **Performance**: Discuss Aircraft Assembly

2. **Conditions**:

   a. Given:

      (1) Supervision, and

      (2) Assistance as required.

   b. Denied: Nil.

   c. Environmental: Classroom or training area large enough to accommodate the entire group.

3. **Standard**: The cadet shall discuss aircraft assembly, to include:

   a. methods of assembly, and

   b. assembly areas.

4. **Teaching Points**:

| TP | Description | Method | Time | Refs |
|---|---|---|---|---|
| TP1 | Describe different methods of assembly of components used by:<br>a. small manufacturers, and<br>b. large manufacturers. | Interactive Lecture | 15 min | C3-105<br>C3-136 (pp. 1-39 to 1-51) |
| TP2 | Discuss manufacturers' assembly areas, to include:<br>a. a small manufacturer's shop, and<br>b. a large manufacturer's assembly line. | Interactive Lecture | 10 min | C3-105<br>C3-136 (pp. 1-39 to 1-50) |

5. **Time**:

   a. Introduction / Conclusion: 5 min

   b. Interactive Lecture: 25 min

   c. Total: 30 min

6. **Substantiation**: An interactive lecture was chosen for this lesson to introduce aspects of aircraft assembly methods and give an overview of them.

7. **References**:

   a. C3-105 Brisley, T., & Pascaud, S. (Executive Producer), & Bowie, B. (Writer / Director) (2003). *World's biggest airliner: The Airbus A380* [Motion Picture]. United States: The Learning Channel.

   b. C3-136 ISBN 0-88487-207-6 Sanderson Training Systems. (2001). *A&P technician airframe textbook*. Englewood, CO: Jeppesen Sanderson Inc.

8. **Training Aids**:

   a. Presentation aids (eg, whiteboard / flip chart / OHP / multimedia projector) appropriate for the classroom / training area.

   b. DVD *World's biggest airliner: The Airbus A380* [Motion Picture]. Brisley, T., Pascaud, S. (Executive Producer), & Bowie, B. (Writer / Director) (2003). United States: The Learning Channel.

9. **Learning Aids**: Nil.

10. **Test Details**: Nil.

11. **Remarks**:

   a. The cadets may have previously viewed The World's Biggest Airliner: The Airbus A380 if EO C270.04 was selected in Proficiency Level Two. This lesson focuses and expands on the assembly of aircraft.

   b. Cadets who are qualified Advanced Aviation Technology – Aircraft Manufacturing and Maintenance may be able to assist with this lesson.

**EO C470.03**

1. **Performance**: Identify Aviation Hardware

2. **Conditions**:

   a. Given:

      (1) Supervision, and

      (2) Assistance as required.

   b. Denied: Nil.

   c. Environmental: Classroom or training area large enough to accommodate the entire group.

3. **Standard**: The cadet shall identify aviation hardware, to include:

   a. bolts,

   b. rivets,

   c. screws, and

   d. turnlock fasteners.

4. **Teaching Points**: Conduct an activity where the cadets will identify aviation hardware, to include:

   a. bolts,

   b. rivets,

   c. screws, and

   d. turnlock fasteners.

5. **Time**:

| | | |
|---|---|---|
| a. | Introduction / Conclusion: | 5 min |
| b. | In-Class Activity: | 25 min |
| c. | Total: | 30 min |

6. **Substantiation**: An in-class activity was chosen for this lesson as it is an interactive way to provoke thought and stimulate interest among cadets.

7. **References**:

   a. C3-136 ISBN 0-88487-207-6 Sanderson Training Systems. (2001). *A&P technician airframe textbook*. Englewood, CO: Jeppesen Sanderson Inc.

   b. C3-137 ISBN 0-88487-203-3 Sanderson Training Systems. (2000). *A&P technician general textbook*. Englewood, CO: Jeppesen Sanderson Inc.

8. **Training Aids**:

   a. Presentation aids (eg, whiteboard / flip chart / OHP / multimedia projector) appropriate for the classroom / training area,

   b. Aviation Hardware Information Sheets, and

   c. Aviation Hardware Identification Worksheet Answer Key.

9. **Learning Aids**:

   a. Pen / pencil, and

   b. Aviation Hardware Handout, and

   c. Aviation Hardware Identification Worksheet.

10. **Test Details**: Nil.

11. **Remarks**: Cadets who are qualified Advanced Aviation Technology – Aircraft Manufacturing and Maintenance may be able to assist with this lesson.

**EO C470.04**

1. **Performance**: Disassemble and Reassemble a Small Engine

2. **Conditions**:

   a. Given:

      (1) Small engine,

      (2) Tools,

      (3) Supervision, and

      (4) Assistance as required.

   b. Denied: Nil.

   c. Environmental: Classroom or training area large enough to accommodate the entire group.

3. **Standard**: The cadet shall:

   a. identify the major components and parts of a small engine;

   b. disassemble the engine; and

   c. reassemble the engine.

4. **Teaching Points**: Conduct an activity where the cadets will:

   a. identify the major components and parts of the small engine;

   b. disassemble the engine; and

   c. reassemble the engine.

5. **Time**:

| | | |
|---|---|---|
| a. | Introduction / Conclusion: | 10 min |
| b. | Practical Activity: | 80 min |
| c. | Total: | 90 min |

6. **Substantiation**: A practical activity was chosen for this lesson as it is an interactive way to allow the cadets to practice aircraft maintenance skills in a safe and controlled environment. This activity contributes to the development of aircraft maintenance skills and knowledge in a fun and challenging setting.

7. **References**: Nil.

8. **Training Aids**:

   a. Presentation aids (eg, whiteboard / flip chart / OHP / multimedia projector) appropriate for the classroom / training area, and

   b. Small engine maintenance manual (if available).

9. **Learning Aids**:

   a. Pen / Pencil,

   b. Paper,

   c. Small engine,

   d. Tools, and

   e. Small engine maintenance manual (if available).

10. **Test Details**: Nil.

11. **Remarks**:

   a. Extra instructors will be required for this lesson to assist with supervision.

   b. Consideration may be given to using SME volunteers from within the community to assist.

   c. Cadets who are qualified Advanced Aviation Technology – Aircraft Manufacturing and Maintenance may be able to assist with this lesson.

   d. There is no instructional guide for this EO.

**PO 490**

1. **Performance**: Participate in an Aircrew Survival Exercise

2. **Conditions**:

   a. Given:

      (1) Matches,

      (2) Firewood / kindling / tinder,

      (3) Fire extinguisher,

      (4) Water,

      (5) Shovel,

      (6) Global Positioning System (GPS) receiver,

      (7) Other materials and equipment as required,

      (8) Supervision, and

      (9) Assistance as required.

   b. Denied: Nil.

   c. Environmental: Field setting during a field training exercise.

3. **Standard**: The cadet will participate in an aircrew survival exercise, to include:

   a. assembling emergency survival kits;

   b. operating a stove and lantern;

   c. tying knots and lashings;

   d. navigating using a GPS receiver; and

   e. lighting a fire without matches.

4. **Remarks**: Nil.

5. **Complementary Material**:

   a. Complementary material associated with PO 490 is designed to enhance the cadet's knowledge of aircrew survival training through a number of activities, specifically:

      (1) EO C490.01 (Describe Climatic and Seasonal Concerns),

      (2) EO C490.02 (Improvise Tools for Use in a Survival Situation),

      (3) EO C490.03 (Move a Casualty to Shelter),

      (4) EO C490.04 (Practice Safe Toolcraft),

      (5) EO C490.05 (Navigate a Route Using a Map and Compass),

(6) EO C490.06 (Erect, Tear Down and Pack Tents) and,

(7) EO C490.07 (Construct a Hootchie or Lean-to-Style Shelter).

b. Complementary material from PO 390 that was not conducted in the previous year may be selected as complementary training in Proficiency Level Four.

**EO M490.01**

1. **Performance**: Assemble an Emergency Survival Kit

2. **Conditions**:

   a. Given:

      (1) Supervision, and

      (2) Assistance as required.

   b. Denied: Nil.

   c. Environmental: Classroom or field setting, during the day.

3. **Standard**: The cadet shall assemble an emergency survival kit.

4. **Teaching Points**:

| TP | Description | Method | Time | Refs |
|---|---|---|---|---|
| TP1 | Discuss the characteristics of an emergency survival kit, to include:<br>a. essential items, and<br>b. small and easy to carry in a pocket. | Interactive Lecture | 5 min | C3-002 (p. 26) |
| TP2 | Explain that emergency survival kit items should be placed in a durable container that is lightweight and waterproof, such as:<br>a. hard plastic,<br>b. flexible plastic, or<br>c. metal. | Interactive Lecture | 5 min | C2-010 (pp. 648–655) |
| TP3 | Explain the purpose of each survival kit item and have the cadets, as a group, assemble an emergency survival kit:<br>a. adhesive bandages,<br>b. aluminum foil,<br>c. antibiotic tablets,<br>d. button compass,<br>e. candle,<br>f. condom,<br>g. cord,<br>h. cotton balls,<br>i. emergency blanket,<br>j. fish hooks,<br>k. fishing line,<br>l. fishing sinkers, | In-Class Activity | 15 min | C3-002 (pp. 26–32)<br>C3-003 (p. 8, pp. 14–16)<br>C3-150 (pp. 33–37) |

| TP | Description | Method | Time | Refs |
|---|---|---|---|---|
| | m. flexible saw,<br>n. garbage bag (small),<br>o. hard candies,<br>p. magnifying glass,<br>q. mirror (small),<br>r. moleskin,<br>s. pain reliever (pills),<br>t. paper,<br>u. pencil,<br>v. personal medication,<br>w. resealable plastic bags (very small),<br>x. safety pins,<br>y. salt,<br>z. sewing needles,<br>aa. small folding knife,<br>bb. snare wire,<br>cc. thread,<br>dd. tweezers,<br>ee. water purification tablets,<br>ff. waterproof matches, and<br>gg. whistle.<br>Note: This list is not exhaustive and is designed to give cadets an idea of what an emergency survival kit could contain. | | | |

5. **Time**:

| | | |
|---|---|---|
| a. | Introduction / Conclusion: | 5 min |
| b. | Interactive Lecture: | 10 min |
| c. | In-Class Activity: | 15 min |
| d. | Total: | 30 min |

6. **Substantiation**:

a. An interactive lecture was chosen for TPs 1 and 2 to present basic material and give direction on assembling an emergency survival kit.

b. An in-class activity was chosen for TP 3 as it is an interactive way to provoke thought and stimulate interest among cadets about emergency survival kits.

7. **References**:


a. C2-010 ISBN 0-375-70323-3 Rawlins, C., & Fletcher, C. (2004). *The complete walker IV*. New York, NY: Alfred A. Knopf.

b. C3-002 ISBN 0-00-653140-7 Wiseman, J. (1999). *The SAS survival handbook*. Hammersmith, London: HarperCollins Publishers.

c. C3-003 ISBN 1-896713-00-9 Tawrell, P. (1996). *Camping and wilderness survival: The ultimate outdoors book*. Green Valley, ON: Author.

d. C3-150 ISBN 978-0-8117-3292-5 Davenport, G. (2002). *Wilderness survival*. Mechanicsburg, PA: Stackpole Books.


8. **Training Aids**: Presentation aids (eg, whiteboard / flip chart / OHP) appropriate for the classroom / training area.

9. **Learning Aids**: Sample emergency survival kit items, such as:

a. hard or flexible plastic or metal container,

b. adhesive bandages,

c. aluminum foil,

d. antibiotic tablets,

e. button compass,

f. candle,

g. condom,

h. cord,

i. cotton balls,

j. emergency blanket,

k. fish hooks,

l. fishing line,

m. fishing sinkers,

n. flexible saw,

o. garbage bag (small),

p. hard candies,

q. magnifying glass,

r. mirror (small),

s. moleskin,

t. pain reliever (pills),

u. paper,

v. pencil,

w. personal medication,

x. resealable plastic bags (very small),

y. safety pins,

z. salt,

aa. sewing needles,

bb. small folding knife,

cc. snare wire,

dd. thread,

ee. tweezers,

ff. water purification tablets,

gg. waterproof matches, and

hh. whistle.

10. **Test Details**: Nil

11. **Remarks**: Cadets who are qualified Survival Instructor may assist with this instruction.

**EO M490.02**

1. **Performance**: Operate a Stove and a Lantern

2. **Conditions**:

   a. Given:

      (1) Two-burner naphtha stove,

      (2) Dual-mantle naphtha lantern,

      (3) Lantern storage carrier,

      (4) Mantles,

      (5) Naphtha,

      (6) Funnel,

      (7) Drip pan,

      (8) Matches,

      (9) Needle-nose pliers,

      (10) Supervision, and

      (11) Assistance as required.

   b. Denied: Nil.

   c. Environmental: Field setting.

3. **Standard**: The cadet shall operate a stove and a lantern, to include:

   a. filling;

   b. pressurizing;

   c. lighting;

   d. extinguishing;

   e. draining;

   f. cleaning;

   g. performing minor maintenance; and

   h. storing.

4. **Teaching Points**:

| TP | Description | Method | Time | Refs |
|---|---|---|---|---|
| TP1 | Identify the characteristics of a two-burner naphtha stove, to include:<br>a. operational temperature,<br>b. fuel type, and<br>c. parts and accessories. | Interactive Lecture | 10 min | See Remarks, para 11b. |
| TP2 | Identify the characteristics of a dual-mantle naphtha lantern, to include:<br>a. parts and accessories, and<br>b. precautions. | Interactive Lecture | 5 min | See Remarks, para 11b. |
| TP3 | Explain, demonstrate and have the cadets fill and drain a stove and a lantern, utilizing a drip pan.<br>Note: A spill response kit should be on hand when fuelling and emptying stoves and lanterns. | Demonstration and Performance | 15 min | See Remarks, para 11b. |
| TP4 | Explain, demonstrate and have the cadets operate a two-burner naphtha stove, to include:<br>a. assembling;<br>b. lighting and extinguishing, to include:<br>(1) pressurizing the fuel tank;<br>(2) lighting the master burner;<br>(3) lighting the auxiliary burner; and<br>(4) extinguishing the burner; and<br>c. disassembling after use. | Demonstration and Performance | 15 min | See Remarks, para 11b. |
| TP5 | Explain, demonstrate and have the cadets operate a dual-mantle naphtha lantern, to include:<br>a. assembling;<br>b. lighting and extinguishing, to include:<br>(1) pressurizing the fuel tank,<br>(2) lighting the lantern, and<br>(3) extinguishing the lantern; and<br>c. storing after use. | Demonstration and Performance | 20 min | See Remarks, para 11b. |
| TP6 | Explain, demonstrate and have the cadets perform minor maintenance on a stove and a lantern, to include:<br>a. cleaning the stove,<br>b. cleaning the lantern, | Demonstration and Performance | 15 min | See Remarks, para 11b. |

| TP | Description | Method | Time | Refs |
|---|---|---|---|---|
| | c. replacing a mantle; and<br>d. inspecting the pump assembly. | | | |

5. **Time**:

| | | |
|---|---|---|
| a. | Introduction / Conclusion: | 10 min |
| b. | Interactive Lecture: | 15 min |
| c. | Demonstration and Performance: | 65 min |
| d. | Total: | 90 min |

6. **Substantiation**:

   a. An interactive lecture was chosen for TPs 1 and 2 to introduce to the cadets the characteristics of the stove and of the lantern.

   b. A demonstration and performance was chosen for TPs 3–6 as it allows the instructor to explain and demonstrate how to operate a stove and lantern while providing an opportunity for the cadets to practice the skill under supervision.

7. **References**: Manuals for stove and lantern types being used.

8. **Training Aids**:

   a. Two-burner naphtha stove,

   b. Dual-mantle naphtha lantern,

   c. Lantern storage carrier,

   d. Mantles,

   e. Naphtha,

   f. Fire extinguisher,

   g. Funnel,

   h. Drip pan,

   i. Matches,

   j. Needle-nose pliers,

   k. Spill response kit,

   l. Manual for stove, and

   m. Manual for lantern.

9. **Learning Aids**:

   a. Two-burner naphtha stove,

   b. Dual-mantle naphtha lantern,

   c. Lantern storage carrier,

d. Mantles,

e. Naphtha,

f. Funnel,

g. Drip pan,

h. Matches, and

i. Needle-nose pliers.

10. **Test Details**: This EO is assessed IAW Chapter 3, Annex B, 490 PC.

11. **Remarks**:

a. The spill response kit will be placed at the fuelling area.

b. Refer to the manuals for all operations and maintenance of the two-burner naphtha stove and dual-mantle naphtha lantern.

c. A fire extinguisher will be at each site where stoves and lanterns are being lit.

d. When cleaning the stove, the fuel tank is to be wiped with fresh naphtha. Protective gloves and clothing are to be worn when completing this task. Acceptable materials for gloves are neoprene and nitrilee / viton. It is also recommended that safety glasses, splash goggles, or face shield be worn. Have eye water wash available.

e. Cadets who are qualified Survival Instructor may assist with this instruction.

**EO M490.03**

1. **Performance**: Tie Knots and Lashings

2. **Conditions**:

   a. Given:

      (1) Braided rope,

      (2) Poles (2 m long, 6 cm in diameter),

      (3) Supervision, and

      (4) Assistance as required.

   b. Denied: Nil.

   c. Environmental: Field setting, during the day.

3. **Standard**: The cadet shall tie knots and lashings, to include:

   a. reef knot,

   b. figure-of-eight knot,

   c. clove hitch,

   d. bowline,

   e. round lashing,

   f. square lashing, and

   g. figure-of-eight lashing.

4. **Teaching Points**:

| TP | Description | Method | Time | Refs |
|---|---|---|---|---|
| TP1 | Describe the parts of a rope, to include:<br>a. the working end (bitter end),<br>b. the working part (running part),<br>c. the standing end,<br>d. the standing part,<br>e. the turn or loop, and<br>f. the bight. | Interactive Lecture | 10 min | C3 026 (pp. 28–29) |
| TP2 | Explain, demonstrate and have the cadets tie the following knots:<br>a. reef knot,<br>b. figure-of-eight knot,<br>c. clove hitch, and<br>d. bowline. | Demonstration and Performance | 20 min | C3-026 (p. 44, p. 98, p. 104, p. 162) |

| TP | Description | Method | Time | Refs |
|---|---|---|---|---|
| TP3 | Explain, demonstrate and have the cadets tie the following lashings:<br>a. round,<br>b. square, and<br>c. figure-of-eight. | Demonstration and Performance | 20 min | C3-026 (p. 180, p. 182, p. 186) |

5. **Time**:

| | | |
|---|---|---|
| a. | Introduction / Conclusion: | 10 min |
| b. | Interactive Lecture: | 10 min |
| c. | Demonstration and Performance: | 40 min |
| d. | Total: | 60 min |

6. **Substantiation**:

   a. An interactive lecture was chosen for TP 1 to present background material on rope terminology.

   b. A demonstration and performance was chosen for TPs 2 and 3 as it allows the instructor to explain and demonstrate tying knots and lashings while providing an opportunity for the cadets to practice and develop these skills under supervision.

7. **References**: C3-026 ISBN 1-55267-218-2 Pawson, D. (2001). *Pocket guide to knots and splices*. London, England: PRC Publishing.

8. **Training Aids**:

   a. Presentation aids (eg, whiteboard / flip chart / OHP) appropriate for the classroom / training area,

   b. Knife,

   c. Braided rope,

   d. Poles, and

   e. Knot-tying and Lashings Instructions handout.

9. **Learning Aids**:

   a. Braided rope,

   b. Poles, and

   c. Knot-tying and Lashings Instructions handout.

10. **Test Details**: This EO is assessed IAW Chapter 3, Annex B, 490 PC.

11. **Remarks**:

   a. The cadet will require two 3-m (10-foot) pieces of 10-mm (3/8 inch) braided rope to perform the required knots and lashings.

   b. Cadets who are qualified Survival Instructor may assist with this instruction.

**EO M490.04**

1. **Performance**: Navigate to a Waypoint Using a Global Positioning System (GPS) Receiver

2. **Conditions**:

   a. Given:

      (1) GPS receiver,

      (2) Supervision, and

      (3) Assistance as required.

   b. Denied: Nil.

   c. Environmental: Field setting, during the day.

3. **Standard**: The cadet shall navigate to a waypoint using a GPS receiver by:

   a. turning on the GPS receiver;

   b. selecting the waypoint list;

   c. selecting a waypoint from the list; and

   d. using the GPS receiver to move to the waypoint.

4. **Teaching Points**:

| TP | Description | Method | Time | Refs |
|---|---|---|---|---|
| TP1 | Explain and demonstrate:<br>a. turning on the GPS receiver;<br>b. selecting the waypoint list;<br>c. selecting a waypoint; and<br>d. using the GPS receiver to move to a waypoint. | Demonstration | 30 min | C2-143 |
| TP2 | Have the cadets practice navigating to a waypoint using a GPS receiver. | Practical Activity | 80 min | |

5. **Time**:

   a. Introduction / Conclusion: 10 min

   b. Demonstration: 30 min

   c. Practical Activity: 80 min

   d. Total: 120 min

6. **Substantiation**:

   a. A demonstration was chosen for TP 1 as it allows the instructor to demonstrate and explain how to navigate to a waypoint using a GPS receiver.

   b. A practical activity was chosen for TP 2 as it allows the instructor to introduce the GPS receiver while providing an opportunity for the cadets to practice navigating to a waypoint using a GPS receiver under supervision.

7. **References**: C2-143 ISBN 1-58923-145-7 Featherstone, S. (2004). *Outdoor guide to using your GPS*. Chanhassen, MN: Creative Publishing International, Inc.

8. **Training Aids**:

   a. Presentation aids (eg, whiteboard / flip chart / OHP / multimedia projector) appropriate for the classroom / training area,

   b. GPS receiver with charged batteries,

   c. Waypoint containers,

   d. Waypoint locations,

   e. Hand-held radio (one per group),

   f. Waypoint form (one per group), and

   g. Pen / pencil.

   h. Prepared course

9. **Learning Aids**:

   a. GPS receiver with charged batteries (one per group),

   b. Hand-held radio with charged batteries (one per group),

   c. Waypoint form (one per group), and

   d. Pen / pencil.

10. **Test Details**: This EO is assessed IAW Chapter 3, Annex B, 490 PC.

11. **Remarks**:

   a. Several waypoints should be set up before this lesson.

   b. The waypoints should be indicated on the ground or object by a marker.

   c. The waypoints should be 200–500 m apart.

   d. Cadets who are qualified Survival Instructor may assist with this instruction.

**EO M490.05**

1. **Performance**: Light Fires Using Improvised Ignition

2. **Conditions**:

   a. Given:

      (1) Aluminium can,

      (2) Battery,

      (3) Chocolate,

      (4) Cordage,

      (5) Knife,

      (6) Magnesium fire starter,

      (7) Magnifying lens,

      (8) Shovel,

      (9) Steel wool,

      (10) Sunglasses,

      (11) Toothpaste,

      (12) Water,

      (13) Wire,

      (14) Supervision, and

      (15) Assistance as required.

   b. Denied: Nil.

   c. Environmental: Field exercise during the day, with a low to moderate rating under the Canadian Wildland Fire Information System (CWFIS).

3. **Standard**: The cadet shall light fires using improvised ignition by:

   a. selecting an improvised ignition from the following:

      (1) magnesium fire starter,

      (2) aluminium can and chocolate,

      (3) battery, wire and steel wool, and

      (4) magnifying lens;

   b. constructing the fire;

   c. lighting and maintaining the fire;

   d. extinguishing the fire; and

   e. repeating steps b–d for each type of ignition.

4. **Teaching Points**:

| TP | Description | Method | Time | Refs |
|---|---|---|---|---|
| TP1 | Explain and demonstrate lighting a fire using a bow drill. | Demonstration | 15 min | C3-003 (pp. 127–128) |
| TP2 | Explain and demonstrate lighting a fire using a fire piston. | Demonstration | 15 min | C3-315 |
| TP3 | Explain, demonstrate and have the cadets light a fire using a magnesium fire starter. | Demonstration and Performance | 20 min | C3-002 (p. 275)<br>C3-003 (p. 129) |
| TP4 | Explain, demonstrate and have the cadets light a fire using an aluminium can and a bar of chocolate, to include:<br>a. polishing the aluminium can base; and<br>b. igniting tinder with the focused rays of the sun. | Demonstration and Performance | 20 min | C3-314 |
| TP5 | Explain, demonstrate and have the cadets light a fire using a battery, wire and steel wool. | Demonstration and Performance | 20 min | C3-002 (p. 275) |
| TP6 | Explain, demonstrate and have the cadets light a fire using a magnifying lens. | Demonstration and Performance | 20 min | C3-002 (p. 275)<br>C3-003 (p. 129) |

5. **Time**:

| | | |
|---|---|---|
| a. | Introduction / Conclusion: | 10 min |
| b. | Demonstration: | 30 min |
| c. | Demonstration and Performance: | 80 min |
| d. | Total: | 120 min |

6. **Substantiation**:

a. A demonstration was chosen for TPs 1 and 2 to allow the cadets to observe lighting a fire with a bow drill and a fire piston, and to stimulate interest in lighting fires using improvised ignition.

b. A demonstration and performance was chosen for TPs 3–6 as it allows the instructor to explain and demonstrate lighting fires with improvised ignition and permits the cadets to practice lighting fires under supervision.

7. **References**:

a. C3-002 ISBN 0-00-653140-7 Wiseman, J. (1999). *The SAS survival handbook*. Hammersmith, London: HarperCollins Publishers.

b. C3-003 ISBN 1-896713-00-9 Tawrell, P. (1996). *Camping and wilderness survival: The ultimate outdoors book*. Green Valley, ON: Author.

c. C3-314 Wildwood Survival. (2009). *Fire from a can of coke and a chocolate bar*. Retrieved February 9, 2009, from http://www.wildwoodsurvival.com/survival/fire/cokeandchocolatebar/index.html

d. C3-315 Primitive Ways. (1996). *The fire piston: Ancient firemaking machine*. Retrieved February 9, 2009, from http://www.primitiveways.com/fire_piston.html

8. **Training Aids**:

a. Aluminium can,

b. Battery,

c. Chocolate,

d. Cordage,

e. Bow drill,

f. Fire piston,

g. Fire extinguisher,

h. Gasoline,

i. Knife,

j. Magnesium fire starter,

k. Magnifying lens,

l. Rags,

m. Shovel,

n. Steel wool,

o. Sunglasses,

p. Toothpaste

q. Water, and

r. Wire.

9. **Learning Aids**:

a. Aluminium can,

b. Battery,

c. Chocolate,

d. Cordage,

e. Knife,

f. Magnesium fire starter,

g. Magnifying lens,

h. Steel wool,

i. Sunglasses, and

j. Toothpaste.

10. **Test Details**: This EO is assessed IAW Chapter 3, Annex B, 490 PC.

11. **Remarks**:

a. Petroleum products such as gasoline should be handled with care due to its combustible properties. Avoid skin contact. Refer to Material Safety Data Sheet (MSDS).

b. Cadets who are qualified Survival Instructor may assist with this instruction.

**EO C490.01**

1. **Performance**: Describe Climatic and Seasonal Concerns

2. **Conditions**:

   a. Given:

      (1) Supervision, and

      (2) Assistance as required.

   b. Denied: Nil.

   c. Environmental: Training area large enough to accommodate the entire group.

3. **Standard**: The cadet shall describe climatic and seasonal concerns that affect a survival situation.

4. **Teaching Points**:

| TP | Description | Method | Time | Refs |
|---|---|---|---|---|
| TP1 | Describe:<br>a. climate associated with the following regions:<br>(1) the West Coast,<br>(2) the Prairies,<br>(3) the Great Lakes–St. Lawrence,<br>(4) Atlantic Canada, and<br>(5) the North; and<br>b. climate change, to include:<br>(1) environmental impact, and<br>(2) health impact. | Interactive Lecture | 15 min | C3-341<br>C3-342<br>C3-343 |
| TP2 | Conduct a group discussion on seasonal concerns in a survival situation, to include:<br>a. spring,<br>b. summer,<br>c. autumn, and<br>d. winter. | Group Discussion | 10 min | C3-344 |

5. **Time**:

   a. Introduction / Conclusion: 5 min

   b. Interactive Lecture: 15 min

   c. Group Discussion: 10 min

   d. Total: 30 min

6. **Substantiation**:

   a. An interactive lecture was chosen for TP 1 to give an overview of climate concerns.

   b. A group discussion was chosen for TP 2 as it allows the cadets to interact with their peers and share knowledge, experiences, opinions, and feelings about seasonal concerns associated with spring, summer, autumn, and winter weather. This helps develop rapport by allowing the instructor to evaluate the cadets' responses in a non-threatening way while helping them refine their ideas. A group discussion also helps the cadets improve their listening skills and develop as members of a team.

7. **References**:

   a. C3-341 Environment Canada.(2009). *Environmental impacts*. Retrieved April 16, 2009, from http://www.ec.gc.ca/cc/default.asp?lang=En&n=4630D154-1

   b. C3-342 Environment Canada. (2009). *Health impacts*. Retrieved April 16, 2009, from http://www.ec.gc.ca/cc/default.asp?lang=En&n=0B072979-1

   c. C3-343 O Canada. (2009). *Canadian regional climate*. Retrieved April 16, 2009, from http://www.ocanada.ca/climate/regional.php

   d. C3-344 Government of Canada. (2008). *Four seasons*. Retrieved April 22, 2009, from http://www.goingtocanada.gc.ca/CIC/display-afficher.do?id=0000000000039&lang=eng

8. **Training Aids**: Nil.

9. **Learning Aids**: Nil.

10. **Test Details**: Nil.

11. **Remarks**: Cadets who are qualified Survival Instructor may assist with this instruction.

**EO C490.02**

1. **Performance**: Improvise Tools for Use in a Survival Situation

2. **Conditions**:

   a. Given:

      (1) Aviation salvage kit,

      (2) Bones,

      (3) Cordage,

      (4) Knife,

      (5) Needle,

      (6) Supervision, and

      (7) Assistance as required.

   b. Denied: Nil.

   c. Environmental: Training area large enough to accommodate the entire group.

3. **Standard**: The cadet shall improvise tools for use in a survival situation, to include:

   a. cutting tools, and

   b. a compass.

4. **Teaching Points**:

| TP | Description | Method | Time | Refs |
|---|---|---|---|---|
| TP1 | Discuss the potential of the materials at hand for use in a survival situation. | Group Discussion | 10 min | A3-016 (p. 150) |
| TP2 | Explain, demonstrate and have the cadets construct a cutting or piercing tool, to include:<br>a. a bone, metal or plastic knife, or<br>b. a bone needle. | Demonstration and Performance | 15 min | |
| TP3 | Explain, demonstrate and have the cadets construct a compass. | Demonstration and Performance | 15 min | |
| TP4 | Explain and demonstrate how to construct a hammer. | Demonstration | 10 min | |

5. **Time**:

| | | |
|---|---|---|
| a. | Introduction / Conclusion: | 10 min |
| b. | Group Discussion: | 10 min |
| c. | Demonstration and Performance: | 30 min |
| d. | Demonstration: | 10 min |
| e. | Total: | 60 min |

6. **Substantiation**:

   a. A group discussion was chosen for TP 1 to allow the cadets to interact with their peers and share knowledge and experiences about the potential of the materials at hand during a survival situation.

   b. A demonstration and performance was chosen for TPs 2 and 3 as it allows the instructor to explain and demonstrate the skill of improvising tools while providing an opportunity for the cadets to practice the skill under supervision.

   c. A demonstration was chosen for TP 4 to allow cadets to observe how to construct a hammer.

7. **References**: A3-016 B-GA-217-001/PT-001 Director Air Operations and Training. (1978). *Down but not out*. Ottawa, ON: Department of National Defence.

8. **Training Aids**:

   a. Bones,

   b. Cordage,

   c. Knife, and

   d. Needle.

9. **Learning Aids**:

   a. Bones,

   b. Cordage,

   c. Knife, and

   d. Needle.

10. **Test Details**: Nil.

11. **Remarks**: Cadets who are qualified Survival Instructor may assist with this instruction.

**EO C490.03**

1. **Performance**: Move a Casualty to Shelter

2. **Conditions**:

   a. Given:

      (1) Wooden poles (approximately 3 m long),

      (2) Shirts / coats,

      (3) Blanket,

      (4) Tarp,

      (5) Cordage,

      (6) Supervision, and

      (7) Assistance as required.

   b. Denied: Nil.

   c. Environmental: Training area large enough to accommodate the entire group.

3. **Standard**: The cadet shall:

   a. assess the situation; and

   b. move a casualty to shelter using:

      (1) a rescue carry, and

      (2) an improvised stretcher.

4. **Teaching Points**:

| TP | Description | Method | Time | Refs |
|---|---|---|---|---|
| TP1 | Conduct an activity where the cadets will practice Emergency Scene Management (ESM), to include:<br>a. scene survey, to include:<br>(1) taking charge of the situation;<br>(2) calling out for help, to attract bystanders;<br>(3) assessing the hazards and making the area safe;<br>(4) finding out the history of the scene, number of casualties and mechanism(s) of injury;<br>(5) identifying yourself and obtaining consent; | Practical Activity | 15 min | A0-134 (pp. 1-11 to 1-15) |

| TP | Description | Method | Time | Refs |
|---|---|---|---|---|
| | (6) assessing the responsiveness of casualty; and<br>(7) getting medical help;<br>b. primary survey, to include:<br>(1) checking the airway;<br>(2) checking for breathing; and<br>(3) checking circulation;<br>c. secondary survey, to include:<br>(1) obtaining a history of the casualty;<br>(2) assessing the vital signs of the casualty;<br>(3) performing a head to toe examination of the casualty; and<br>(4) giving first aid to the casualty; and<br>d. ongoing casualty care, to include:<br>(1) giving first aid for shock;<br>(2) monitoring the casualty's condition;<br>(3) recording the events of the situation; and<br>(4) reporting on what happened. | | | |
| TP2 | Explain, demonstrate and have the cadets, in pairs / groups of three, move a casualty to shelter, to include:<br>a. moving and carrying over short distances using:<br>(1) drags,<br>(2) the tarp drag method,<br>(3) single-rescue carries, to include:<br>(a) packstrap carry,<br>(b) piggyback carry, and<br>(c) carrying seat; and<br>b. carrying over long distances using the following two-person carries:<br>(1) the fore-and-aft lift and carry, and<br>(2) two-hand seat. | Demonstration and Performance | 20 min | C2-030 (pp. 18–30) |

| TP | Description | Method | Time | Refs |
|---|---|---|---|---|
| TP3 | Explain, demonstrate and have the cadets, as members of a group, fabricate an improvised stretcher, to include:<br>a. inventorying the available resources;<br>b. fabricating the improvised stretcher; and<br>c. testing the durability of the stretcher before use. | Demonstration and Performance | 30 min | C2-030 (pp. 30–33) |
| TP4 | Discuss casualty care, to include:<br>a. focusing on:<br>(1) breathing,<br>(2) warmth,<br>(3) body's position (eg, recovery, comfortable),<br>(4) morale,<br>(5) rest,<br>(6) fluid intake,<br>(7) urination, and<br>b. recording all observations. | Interactive Lecture | 15 min | C2-030 (pp. 52–69) |

5. **Time**:

| | | |
|---|---|---|
| a. | Introduction / Conclusion: | 10 min |
| b. | Practical Activity: | 15 min |
| c. | Demonstration and Performance: | 50 min |
| d. | Interactive Lecture: | 15 min |
| e. | Total: | 90 min |

6. **Substantiation**:

a. A practical activity was chosen for TP 1 as it is an interactive way to allow cadets to experience emergency scene management skills in a safe, controlled environment. This activity contributes to the development of first aid skills and knowledge in a fun and challenging setting.

b. A demonstration and performance was chosen for TPs 2 and 3 as it allows the instructor to explain and demonstrate moving a casualty to shelter and fabricating an improvised stretcher while providing an opportunity for the cadets to practice and develop these skills under supervision.

c. An interactive lecture was chosen for TP 4 to introduce the cadets to assessing the situation and caring for a casualty.

7. **References**:

a. A0-134 A-MD-050-072/PW-001 Canadian Forces (2006). *Military first aid: Safety oriented: basic and standard Levels: Activity book*. Ottawa: Department of National Defence.

b. C2-030 ISBN 0-7710-8250-9 Merry, W. (1994). *St. John Ambulance: The official wilderness first aid guide*. Toronto, ON: McClelland & Stewart Inc.

8. **Training Aids**:

a. Presentation aids (eg, whiteboard / flip chart / OHP / multimedia projector) appropriate for the classroom / training area,

b. Wooden poles (approximately 3 m long),

c. Shirts / coats,

d. Blanket,

e. Tarp, and

f. Cordage.

9. **Learning Aids**:

a. Wooden poles (approximately 3 m long),

b. Shirts / coats,

c. Blanket,

d. Tarp, and

e. Cordage.

10. **Test Details**: Nil.

11. **Remarks**:

a. Cadets who are qualified Survival Instructor or qualified first-aiders in Proficiency Level Four may assist in the conduct of this EO.

b. The assessment of the casualty in order to move the casualty will be conducted by the qualified first-aider.

c. Samples of improvised stretchers should be fabricated before conducting this lesson to use as examples.

**EO C490.04**

1. **Performance**: Practice Safe Toolcraft

2. **Conditions**:

   a. Given:

      (1) Axe,

      (2) Bow saw,

      (3) Shovel,

      (4) Knife,

      (5) Honing stone,

      (6) Sharpening stone,

      (7) Cloth,

      (8) Supervision, and

      (9) Assistance as required.

   b. Denied: Nil.

   c. Environmental: Field setting.

3. **Standard**: The cadet shall practice safe toolcraft while in the field, when using:

   a. an axe,

   b. a bow saw,

   c. a shovel, and

   d. a knife.

4. **Teaching Points**:

| TP | Description | Method | Time | Refs |
|---|---|---|---|---|
| TP1 | Explain, demonstrate and have the cadets:<br>a. handle tools;<br>b. pass tools; and<br>c. store tools. | Demonstration and Performance | 25 min | C3-003 (pp. 171–174) |
| TP2 | Explain, demonstrate and have the cadets:<br>a. clean and sharpen a knife; and<br>b. file and sharpen an axe. | Demonstration<br>And<br>Performance | 20 min | C3-002 (p. 35)<br>C3-003 (p. 25) |

| TP | Description | Method | Time | Refs |
|---|---|---|---|---|
| TP3 | Explain, demonstrate and have the cadets cut wood using:<br>a. an axe; and<br>b. a bow saw. | Demonstration and Performance | 20 min | C3-002 (p. 306)<br>C3-003 (pp. 171–174) |
| TP4 | Explain, demonstrate and have the cadets use a shovel, to include:<br>a. digging a hole; and<br>b. filling a hole. | Demonstration and Performance | 15 min | |

5. **Time**:

   a. Introduction / Conclusion: 10 min

   b. Demonstration and Performance: 80 min

   c. Total: 90 min

6. **Substantiation**: A demonstration and performance was chosen for this lesson as it allows the instructor to explain and demonstrate the skills. The cadets are expected to sharpen a knife and an axe, and to cut wood while providing an opportunity for the cadets to practice the skills under supervision.

7. **References**:

   a. C3-002 ISBN 0-00-653140-7 Wiseman, J. (1999). *The SAS survival handbook*. Hammersmith, London: HarperCollins Publishers.

   b. C3-003 ISBN 1-896713-00-9 Tawrell, P. (1996). *Camping and wilderness survival: The ultimate outdoors book*. Green Valley, ON: Falcon Distribution.

8. **Training Aids**:

   a. Vice or clamp,

   b. Axe,

   c. Bow saw,

   d. Shovel,

   e. Knife,

   f. Honing stone,

   g. Sharpening stone,

   h. Cloth, and

   i. First aid kit.

9. **Learning Aids**:

   a. Vice or clamp,

   b. Axe,

c. Bow saw,

d. Shovel,

e. Knife,

f. Honing stone,

g. Sharpening stone, and

h. Cloth.

10. **Test Details**: Nil.

11. **Remarks**:

a. Sharpening should only be done under close supervision of trained staff members, to prevent unnecessary damage to the equipment and injury to cadets.

b. Cadets who are qualified Survival Instructor may assist with this instruction.

THIS PAGE INTENTIONALLY LEFT BLANK

**EO C490.05**

1. **Performance**: Navigate a Route Using a Map and Compass

2. **Conditions**:

   a. Given:

      (1) Calculator,

      (2) Compass,

      (3) Paper,

      (4) Pen / pencil,

      (5) Predetermined declination,

      (6) Topographical maps (including one of the training area),

      (7) Supervision, and

      (8) Assistance as required.

   b. Denied: Nil.

   c. Environmental: Field setting or training area large enough to accommodate the entire group.

3. **Standard**: The cadet shall navigate a six-leg predetermined route no longer than two kilometres, using a map and compass.

4. **Teaching Points**:

| TP | Description | Method | Time | Refs |
|---|---|---|---|---|
| TP1 | Review the compass, to include:<br>a. the principles behind the workings of a compass,<br>b. the parts of the compass,<br>c. magnetic declination, and<br>d. how to set a predetermined declination. | Practical Activity | 10 min | A2-036 (pp. 5-29 to 5-31)<br>A2-041 (pp. 66–68) |
| TP2 | Review topographical maps, to include:<br>a. marginal information, and<br>b. conventional signs. | Practical Activity | 10 min | A2-041 (pp. 7–13, pp. 19–26) |
| TP3 | Conduct an activity to have the cadets review grid references (GRs), to include:<br>a. four-figure GRs,<br>b. constructing a romer, and<br>c. six-figure GRs. | Practical Activity | 20 min | A2-041 (pp. 37–41) |

| TP | Description | Method | Time | Refs |
|---|---|---|---|---|
| TP4 | Conduct an activity to have the cadets review:<br>a. determining distance on a map, to include:<br>(1) measuring point-to-point; and<br>(2) measuring along a route between two points; and<br>b. determining bearings on a map, to include:<br>(1) the 16 points of a compass,<br>(2) the degree system,<br>(3) the three norths, and<br>(4) types of bearings. | Practical Activity | 20 min | A2-041 (pp. 16–18, pp. 47–51, pp. 68–70)<br>C2-041 (p. 50) |
| TP5 | Conduct an activity to have the cadets review:<br>a. determining distance on the ground, to include:<br>(1) determining personal pace; and<br>(2) identifying factors that affect pace; and<br>b. determining bearings on the ground. | Practical Activity | 20 min | A2-041 (pp. 68–70)<br>C0-111 (p. 530, p. 531)<br>C2-041 (p. 106) |
| TP6 | Have the cadets navigate a route using a map and compass. | Practical Activity | 30 min | |

5. **Time**:

a. Introduction / Conclusion: 10 min

b. Practical Activity: 110 min

c. Total: 120 min

6. **Substantiation**: A practical activity was chosen for this lesson as it is an interactive way for the cadets to review the compass, topographical maps, GRs, distance on the map and on the ground, bearings on the map and on the ground, and to navigate a route using a map and compass in a safe and controlled environment. This activity contributes to the development of navigation skills and knowledge in a fun and challenging setting.

7. **References**:

a. A2-036 A-CR-CCP-121/PT-001 Director Cadets 3. (2003). *Royal Canadian army cadet reference book*. Ottawa, ON: Department of National Defence.

b. A2-041 B-GL-382-005/PT-001 Directorate of Army Doctrine 8. (2006). *Maps, field sketching, compasses and the global positioning system*. Ottawa, ON: Department of National Defence.

c. C0-111 ISBN 978-0-9740820-2-8 Tawrell, P. (2006). *Camping and wilderness survival: The ultimate outdoors book* (2nd ed.). Lebanon, NH: Author.

d. C2-041 ISBN 978-0-07-136110-3 Seidman, D., & Cleveland, P. (1995). *The essential wilderness navigator*. Camden, ME: Ragged Mountain Press.

8. **Training Aids**:

   a. Presentation aids (eg, whiteboard / flip chart / OHP / multimedia projector) appropriate for the classroom / training area,

   b. Calculator,

   c. Compass,

   d. Constructed romer,

   e. Paper,

   f. Pen / pencil,

   g. Protractor, and

   h. Topographical maps (including one of the training area).

9. **Learning Aids**:

   a. Calculator,

   b. Compass,

   c. Paper,

   d. Pen / pencil,

   e. Predetermined declination, and

   f. Topographical maps (including one of the training area).

10. **Test Details**: Nil.

11. **Remarks**:

   a. TPs 1–5 are taught by learning stations. Divide the cadets into four groups and have the groups rotate between four learning stations: one station for TPs 1 and 2 and one station each for TPs 3–5.

   b. To preserve and reuse the maps, they should be covered or coated with mac tac to allow the use of dry-erase markers instead of pencils or pens.

   c. Assistant instructors and cadets who are qualified Survival Instructor may assist with this instruction.

THIS PAGE INTENTIONALLY LEFT BLANK

**EO C490.06**

1. **Performance**: Erect, Tear Down and Pack Tents

2. **Conditions**:

   a. Given:

      (1) 5- or 10-person arctic tent,

      (2) Civilian-pattern tent,

      (3) Modular tent, to include:

         (a) two centre sections,

         (b) one front,

         (c) one rear,

         (d) three “A” frames,

         (e) six purlins, and

         (f) six steel pegs;

      (4) Mallet,

      (5) Shovel,

      (6) Supervision, and

      (7) Assistance as required.

   b. Denied: Nil.

   c. Environmental: Field setting during the day.

3. **Standard**: The cadet, as a member of a group, shall erect, tear down and pack tents.

4. **Teaching Points**:

| TP | Description | Method | Time | Refs |
|---|---|---|---|---|
| TP1 | Discuss site selection, to include:<br>a. requiring access by vehicle for set-up and equipment transport;<br>b. inspecting the area for the following:<br>(1) proximity to a water source that provides potable water and food from fishing;<br>(2) proximity to a fuel source for fire during cold weather;<br>(3) proximity to building materials;<br>(4) proximity to animal trails or holes; | Interactive Lecture | 10 min | A3-059 (p.1-5, p. 1-8, pp. 2-1 to 2-20) |

| TP | Description | Method | Time | Refs |
|---|---|---|---|---|
| | (5) an area that can be seen from aircraft above; and<br>(6) an entrance that is sheltered from the wind and preferably in the direction of the sun; and<br>c. placing tents away from the cooking area. | | | |
| TP2 | Explain, demonstrate and have the cadets, as members of a group, erect, tear down and pack a two-section modular tent with walls, to include:<br>a. identifying components of a modular tent;<br>b. identifying tent sections, to include:<br>(1) centre section,<br>(2) front wall, and<br>(3) rear wall;<br>c. discussing tent maintenance;<br>d. erecting by:<br>(1) laying out and connecting the frame;<br>(2) locking the frame;<br>(3) connecting tent sections;<br>(4) raising the side and placing canvas; and<br>(5) anchoring;<br>e. tearing down by:<br>(1) loosening the cables and ground anchors;<br>(2) removing material from the sod cloth;<br>(3) releasing all straps and lacing up to the eave purlins;<br>(4) lowering the tent one side at a time;<br>(5) unlacing tent walls and sections and removing from frame; and<br>(6) dismantling the frame (reverse procedure); and<br>f. packing by:<br>(1) laying out the canvas with the outer surface facing the ground, for ease of cleaning; | Demonstration and Performance | 70 min | A3-059 (p. 1-5, p. 1-8, p. 2-1 to 2-20) |

| TP | Description | Method | Time | Refs |
|---|---|---|---|---|
| | (2) folding front and rear walls by:<br>(a) bringing the peak and sides of the wall toward the centre to square off the wall;<br>(b) bringing the ends of the walls to the centre of the wall;<br>(c) folding the wall in half; and<br>(d) folding the opposite way to complete the process; and<br>(3) folding the centre section by:<br>(a) taking the ends of the section and placing them in the centre of the section;<br>(b) taking one end and folding it across to the other end;<br>(c) taking the section and folding it into thirds;<br>(d) folding the section in half; and<br>(e) folding the section in half in the opposite direction. | | | |
| TP3 | Explain, demonstrate and have the cadets, as members of a group, erect, tear down and pack one of the following types of tents:<br>a. a 5- or 10-person arctic tent, to include:<br>(1) identifying components of a 5- or 10-person arctic tent, and<br>(2) inspecting an arctic tent; or<br>b. a civilian-pattern dome tent, to include:<br>(1) selecting a civilian-pattern dome tent, based on:<br>(a) seasons and conditions,<br>(b) weight, and<br>(c) features; and<br>(2) maintaining the tent, to include:<br>(a) protecting the tent;<br>(b) lighting the tent;<br>(c) not eating in the tent; and<br>(d) cleaning the tent. | Demonstration and Performance | 30 min | A3-060 (pp. 3-11 to 3-25) |

5. **Time**:

| | | |
|---|---|---|
| a. | Introduction / Conclusion: | 10 min |
| b. | Interactive Lecture: | 10 min |
| c. | Demonstration and Performance: | 100 min |
| d. | Total: | 120 min |

6. **Substantiation**:

a. An interactive lecture was chosen for TP 1 to give direction on factors to consider when selecting a site.

b. A demonstration and performance was chosen for TPs 2 and 3 as it allows the instructor to explain and demonstrate erecting, tearing down and packing tents while providing an opportunity for the cadets to practice the skills under supervision.

7. **References**:

a. A3-059 C-87-110-000/MS-000 Canadian Forces. (1983). *Operational support and maintenance manual: Tent, main*. Ottawa, ON: Department of National Defence.

b. A3-060 B-GG-302-002/FP-001 Canadian Forces. (1974). *Arctic and sub-arctic operations: Part 1*. Ottawa, ON: Department of National Defence.

8. **Training Aids**:

a. Modular tent,

b. 5- or 10-person arctic tent,

c. Civilian-pattern dome tent,

d. Mallet, and

e. Shovel.

9. **Learning Aids**:

a. Modular tent,

b. 5- or 10-person arctic tent or civilian-pattern dome tent,

c. Mallet, and

d. Shovel.

10. **Test Details**: Nil.

11. **Remarks**:

a. If the squadron does not have access to modular tents, have the cadets erect, tear down and pack the arctic tent and the civilian-pattern tent.

b. Cadets who are qualified Survival Instructor may assist with this instruction.

**EO C490.07**

1. **Performance**: Construct a Hootchie or Lean-to-Style Shelter

2. **Conditions**:

   a. Given:

      (1) Groundsheet,

      (2) Cordage,

      (3) Knife,

      (4) Supervision, and

      (5) Assistance as required.

   b. Denied: Nil.

   c. Environmental: Overnight aircrew survival exercise.

3. **Standard**: The cadet shall:

   a. select an improvised shelter site; and

   b. construct a hootchie or lean-to-style shelter.

4. **Teaching Points**:

   a. Brief the cadets prior to the activity, to include an explanation of:

      (1) the objectives and importance of the activity;

      (2) the resources that may be required to perform the activity; and

      (3) any safety guidelines that must be followed while participating in the activity.

   b. Have the cadets select an improvised shelter site.

   c. Have the cadets construct a hootchie or lean-to-style shelter.

5. **Time**:

| | | |
|---|---|---|
| a. | Introduction / Conclusion: | 10 min |
| b. | Practical Activity: | 80 min |
| c. | Total: | 90 min |

6. **Substantiation**: A practical activity was chosen for this lesson as it allows the cadets to practice aircrew survival skills in a safe and controlled environment. This activity contributes to the development of aircrew survival skills and knowledge in a fun and challenging way.

7. **References**: Nil.

8. **Training Aids**: Nil.

9. **Learning Aids**:

   a. Groundsheet,

   b. Cordage, and

   c. Knife.

10. **Test Details**: Nil.

11. **Remarks**:

   a. Cadets are encouraged to sleep overnight during the aircrew survival exercise in the improvised shelter. The squadron staff will decide whether or not the cadets will sleep overnight in the improvised shelter using the principles of due diligence and safety considerations.

   b. Cadets who are qualified Survival Instructor may assist with this instruction.

   c. There is no instructional guide for this EO.

## INSTRUCTIONAL METHODOLOGIES AND THEIR APPLICATIONS

The various methods of instruction commonly accepted as appropriate for cadet training is outlined below.

| METHOD | DEVELOPMENTAL PERIOD ONE<br>AGES 12 – 14<br>EXPERIENCE-BASED | DEVELOPMENTAL PERIOD TWO<br>AGES 15 – 16<br>DEVELOPMENTAL | DEVELOPMENTAL PERIOD THREE<br>AGES 17 – 18<br>COMPETENCY |
|---|---|---|---|
| **Behaviour Modeling** | Not applicable | Not applicable | Applicable |
| **Case Study** | Not applicable | Applicable | Applicable |
| **Demonstration and Performance** | Applicable | Applicable | Applicable |
| **Experiential Learning** | Applicable | Applicable | Applicable |
| **Field Trip** | Applicable | Applicable | Applicable |
| **Game** | Applicable | Applicable | Applicable |
| **Group Discussion** | Applicable | Applicable | Applicable |
| **Guided Discussion** | Not applicable | Not applicable | Applicable |
| **In-class Activity** | Applicable | Applicable | Applicable |
| **Interactive Lecture** | Applicable | Applicable | Applicable |
| **Lecture** | Applicable | Applicable | Applicable |
| **On-the job Training (OJT)** | Not applicable | Not applicable | Applicable |
| **Peer Learning** | Not applicable | Not applicable | Applicable |
| **Practical Activity** | Applicable | Applicable | Applicable |
| **Problem-based Learning** | Not applicable | Applicable | Applicable |
| **Role Play** | Not applicable | Applicable | Applicable |
| **Self-Study** | Not applicable | Not applicable | Applicable |
| **Seminar Method** | Not applicable | Applicable | Applicable |
| **Simulation** | Not applicable | Not applicable | Applicable |
| **Tutorial** | Not applicable | Not applicable | Applicable |

General information follows on each method for its age-appropriateness, definition, application, advantages and disadvantages.

| METHOD(S) | APPLICATIONS | ADVANTAGES | DISADVANTAGES |
|---|---|---|---|
| **CASE STUDY**<br>Cadets are given a written problem, situation or scenario, to which they respond either individually or as a group in order to achieve a performance objective. The problem situation or scenario should match the experience level of the cadets and they should be given enough time either before or during the instructional period to analyze it. Responses to the case should be recorded under four headings: Facts, Assumptions, Problems and Solutions | 1. Learning principles, attitudes and concepts. | 1. Effective application of teaching principles instead of “preaching”.<br>2. Cadets can help each other learn.<br>3. High energy and perfect demonstrations.<br>4. Can be easily related to a real life situation in the past and for future applications. | 1. Must be well organized and facilitated in order to ensure learning takes place. |
| **DEMONSTRATION AND PERFORMANCE**<br>Cadets observe the instructor performing the task in a demonstration, and rehearse it under the supervision of the instructor. A good example of this is drill instruction, where cadets are shown a movement and given the opportunity to practice and perform it. | | | |
| **Demonstration Method**<br>A method of instruction where the instructor, by actually performing an operation or doing a job, shows the cadet what to do, how to do it and through explanations brings out why, where and when it is done. | **Demonstration Method**<br>1. To teach manipulative hands-on operations or procedures.<br>2. To teach troubleshooting.<br>3. To illustrate principles.<br>4. To teach operation or functioning of equipment.<br>5. To teach teamwork.<br>6. To set standards of workmanship.<br>7. To teach safety procedures. | **Demonstration Method**<br>1. Minimizes damage and waste.<br>2. Saves time.<br>3. Can be presented to large groups. | **Demonstration Method**<br>1. Requires careful preparation and rehearsal.<br>2. Requires special classroom arrangements.<br>3. Requires equipment and aids. |
| **Performance Method**<br>A method in which the cadet is required to perform, under controlled conditions, the operations, skill or movement being taught. | **Performance Method**<br>1. To teach manipulative hands-on operations or procedures.<br>2. To teach operations or functioning of equipment.<br>3. To teach team skills.<br>4. To teach safety procedures. | **Performance Method**<br>1. Builds confidence.<br>2. Enables learning evaluation.<br>3. Reduces damage and waste.<br>4. Promotes safety. | **Performance Method**<br>1. Requires tools and equipment.<br>2. Requires large blocks of time.<br>3. Requires more instructors. |

| METHOD(S) | APPLICATIONS | ADVANTAGES | DISADVANTAGES |
|---|---|---|---|
| **EXPERIENTIAL LEARNING**<br>Learning in the cadet program is centred on experiential learning. This involves learning knowledge and skills from direct experience. People learn best from their own experiences and can then apply the knowledge and skills in new situations. The four stages of the cycle may be considered and applied to all activities within the Cadet Program, regardless of methodology chosen.<br>**Stage 1: Concrete Experience:**<br>Cadets have an experience and take time to identify and define what the experience is. Sample activities: direct observations, simulations, field trips, and reading.<br>**Stage 2: Reflective Observation:** Cadets need to reflect on and examine what they saw, felt and thought while they were having the experience. Sample activities: discussion, journals / logs, and graphs.<br>**Stage 3: Abstract Conceptualization:** Cadets work to understand and make connections from the experience to new or different situations. Sample activities: interview, discussion, model building, analogies and planning.<br>**Stage 4: Active Experimentation:** Cadets look ahead to and plan the application of skills and knowledge acquired to future experience. Sample activities include: simulation, fieldwork.<br>Note: The cycle is ongoing as each learning experience builds on another. | 1. To teach practical skills.<br>2. To learn how to learn.<br>3. To teach transferable skills.<br>4. To teach the process or principle.<br>5. To teach problem solving. | 1. Knowledge is shared and created by everyone.<br>2. Everyone is actively involved in the teaching – learning process.<br>3. Numerous resources are used.<br>4. Cadet based. | 1. Many resources are required (may be expensive).<br>2. Needs a lot of planning, preparation and organization prior to activity.<br>3. The instructor must master the subject developed.<br>4. Instructor needs very good pedagogical skills.<br>5. May not be a good process for learning details. |
| **FIELD TRIP**<br>Theoretical knowledge is reinforced through participation in an activity in a real-life setting. Prior planning helps to ensure all pre-training and safety standards are met. Field trip activities are planned and carried out to achieve clear instructional objectives that are understood by the cadets. Examples can include trips to areas of local interest, flying / gliding, hiking or sailing. | 1. Awareness of historical situations.<br>2. Can be used in conjunction with many other instructional methods.<br>3. To introduce / illustrate and confirm topics. | 1. Immerse cadets in a specific environment. | 1. May be difficult to control.<br>2. Needs much organization and preparation.<br>3. May have cost involved. |

| METHOD(S) | APPLICATIONS | ADVANTAGES | DISADVANTAGES |
|---|---|---|---|
| **GAME**<br>Games are used with one or more participants to practice skills, apply strategies and enhance teams. It is critical that the game supports learning through the provision of a challenging activity that allows for the skill practice or knowledge confirmation. Games are a fun and interesting way to introduce a topic, expand cadets' understanding knowledge of topic or review material. | 1. Practical situations.<br>2. Discovery of concepts and principles.<br>3. Review and confirmation.<br>4. Games include rules and assessment. | 1. Fun, interesting.<br>2. Creates ownership.<br>3. Highly participative.<br>4. Many resources involved. | 1. May stratify the group by creating a winner and a loser.<br>2. May be difficult to providing instructor feedback. |
| **GROUP DISCUSSION**<br>Cadets discuss issues, share knowledge, opinions and feelings about a topic in small groups to a specific goal. The instructor's questioning is flexible and minimal, and aims at encouraging cadets to explore their own experiences and opinions through peer interaction. | 1. To develop imaginative solutions to problems.<br>2. To stimulate thinking and interest and to secure cadet participation.<br>3. To emphasize main teaching points.<br>4. To supplement lectures.<br>5. To determine how well cadets understand the concepts and principles.<br>6. To prepare cadets for application of theory or procedure.<br>7. To summarize, clarify points or review.<br>8. To prepare cadets for instruction that will follow.<br>9. To determine cadet progress and effectiveness of prior instruction. | 1. Increases cadet interest.<br>2. Increases cadet acceptance and commitment.<br>3. Utilizes cadet knowledge and experience.<br>4. Results in more permanent learning because of the high degree of cadet participation / cognitive involvement. | 1. Requires highly skilled instructors.<br>2. Required preparation by cadets.<br>3. Limits contents.<br>4. Consumes time.<br>5. Restricts size of group.<br>6. Requires selective group composition. |

| METHOD(S) | APPLICATIONS | ADVANTAGES | DISADVANTAGES |
|---|---|---|---|
| **IN-CLASS ACTIVITY**<br>In-class activities encompass a wide variety of activity-based learning opportunities that can be used to reinforce instructional topics or to introduce cadets to new experiences. In-class activities should provoke thought and stimulate interest among cadets, while maintaining relevance to the performance objectives. Examples of these activities include learning stations, videos, brainstorming / debating. | 1. To reinforce instructional topics.<br>2. To orient cadets to the subject.<br>3. To introduce a subject.<br>4. To give direction on procedures.<br>5. To present basic material.<br>6. To introduce a demonstration, discussion or performance.<br>7. To illustrate the application of rules, principles or concepts.<br>8. To review, clarify, empathize or summarize. | 1. To provoke thought and stimulate interest among cadets, while maintaining relevance to the performance objectives.<br>2. Permits flexibility with class size.<br>3. Requires less rigid space requirements.<br>4. Permits adaptability.<br>5. Permits versatility.<br>6. Permits better control over content and sequence. | 1. Encourages cadet passiveness.<br>2. Difficult to gauge cadet reaction.<br>3. Takes time to prepare. |
| **INTERACTIVE LECTURE**<br>The instructor-driven methodology combines both lecture and interaction to meet lesson objectives. Lecture portions of the lesson are offset with relevant activities such as videos with discussion, games to confirm and completion of handouts. | 1. To orient cadets to the subject.<br>2. To introduce a subject.<br>3. To give instruction on procedures.<br>4. To present basic material.<br>5. To illustrate the application of rules, principles or concepts.<br>6. To review, clarify, empathize or summarize. | 1. Saves time.<br>2. Permits flexibility of class size.<br>3. Requires less rigid space requirements.<br>4. Permits adaptability.<br>5. Permits versatility.<br>6. Permits better control over content and sequence. | 1. Involves one-way communication.<br>2. Poses problems in skill teaching.<br>3. Encourages passive behaviour.<br>4. Difficult to gauge cadet reaction.<br>5. Requires highly skilled instructors.<br>6. Requires a high level of concentration from the cadets. |
| **LECTURE**<br>This is a formal or semi-formal discourse in which the instructor presents a series of events, facts, principles, explores a problem or explains relationships. | 1. To orient cadets to the subject.<br>2. To introduce a subject.<br>3. To give instruction on procedures.<br>4. To present basic material.<br>5. To illustrate the application of rules, principles or concepts.<br>6. To review, clarify, empathize or summarize. | 1. Proficient oral skills are required.<br>2. Useful for big groups.<br>3. Saves time because of fewer interruptions. | 1. Should have a clear introduction and conclusion.<br>2. Cadets may be passive and uninvolved. |

| METHOD(S) | APPLICATIONS | ADVANTAGES | DISADVANTAGES |
|---|---|---|---|
| **PRACTICAL ACTIVITY**<br>Practical activities encompass a wide variety of activity-based learning opportunities that can be used to reinforce and practice instructional topics or to introduce cadets to new experiences. Practical activities should stimulate interest among cadets and encourage their participation, while maintaining relevance to the performance objectives. | 1. Review.<br>2. In practical situations such as leadership development, parade appointments, etc.<br>3. To introduce a subject. | 1. Encourage participation by cadets.<br>2. Stimulate interest in the subject.<br>3. Maintain relevance to the performance objectives.<br>4. Fun and interesting.<br>5. Creates ownership.<br>6. Highly participative in small groups.<br>7. Many resources involved. | 1. Extensive supervision is required to ensure proper content is covered.<br>2. Takes time to prepare.<br>3. Not suitable for large groups. |
| **PROBLEM-BASED LEARNING**<br>Cadets analyse a problem, apply the steps in the problem solving method and work toward solving the problem in small groups. Problem-based learning requires cadets to participate and interact with each other while developing critical thinking skills. Instructors choose problem that stimulate thought, reinforce learning and relate to the cadets' interest and needs. Throughout the exercise, instructors pose thought-provoking questions and guide cadets without influencing their decisions. | 1. Review.<br>2. In practical situations such as leadership development, parade appointments, etc. | 1. Encourage participation by cadets.<br>2. Stimulate interest in the subject.<br>3. Maintain relevance to the performance objectives.<br>4. Many resources involved. | 1. Critical thinking skills are required.<br>2. Broad knowledge of the subject matter is required. |
| **ROLE PLAY**<br>Cadets are assigned roles requiring them to interact with others in responding to various realistic situations. The instructor identifies the purpose of the role-play, provides the cadets with enough background information to help them accurately play their assigned role, and motivates them to become more fully involved in the activity. De-brief after the role-play is essential to connect the activity with the PO / EO. | 1. Skills associated with social systems or human interactions; practical situations eg. Positive Social Relations for Youth, discipline issues, behaviour on the range, leadership, instructional techniques.<br>2. Attitudinal objectives. | 1. High participation, interactive delivery and may lead to discussions.<br>2. Experience is developed in a supportive environment.<br>3. Can be very versatile depending on application eg, introduce a topic, mid-stage learning or as confirmation. | 1. Participants can be easily sidetracked, need for good preparation and controls must be set appropriately.<br>2. Competence, experience and prepared instructors required. |